CMA DISHMACHINES

Energy MIZER®

CMA-66L

Chemical Sanitizing
66" Conveyor
Dishwasher

FEATURES:

- Auto re-fill system.
- 242 racks / 968 covers per hour.
- Economical to operate. Uses only .8 gallons of water per cycle.
- Four-stage washing process provides pre-wash, dual power wash and final rinse all in a 66" machine.
- Automatic soil purging system filters wash water and traps plate debris into an external tray. Tray can be easily removed for dumping contents.
- Brass rocker arm bearing (extends longevity) newly engineered.
- All stainless steel construction offers durable performance and years of trouble free operation.
- Upgraded high load power contactors.
- Built-in chemical resistant industrial 10kW heater is proven to be more durable than commercial style heaters.
- Large 19" high opening accommodates larger items and utensils.
- Auto start/stop makes operation safe and easy.
- Includes table limit switch and rack saver arm that protect the machine, dishracks and table from damage.
- Two speed settings available for optimum cleaning performance.
- Auto Fill.
- Built-in Poly Pro™ scrap accumulator.

Rack saver clutch system with brass rocker arm bearing protects the machine, dishracks and table from damage.

Four-stage washing process provides pre-wash, dual power wash and final rinse all in a 66" machine.

Large 19" high opening accommodates larger items and utensils.

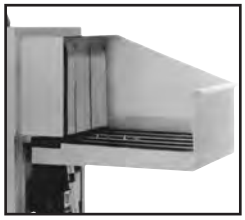

Shown with optional corner feed table. Available right or left.

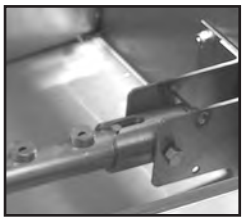

Easy to remove wash arms with captive end caps. ***Never lose another end cap again!***

Single action control switch with easy to read temperature gauges and complete operating instructions.

CMA Dishmachines 12700 Knott Street Garden Grove, CA 92841• 800-854-6417 • 714-898-8781 • Fax: 714-895-2141 • www.cmadishmachines.com

CMA reserves the right to modify specifications or discontinue models without prior notification.

Printed in the U.S.A.

© 2008 CMA, Inc.

CMA DISHMACHINES

Energy MIZER®

CMA-66L

Chemical Sanitizing
66" Conveyor
Dishwasher

WARNING: Plumbing connections must be made by a qualified service company who will comply with all available Federal, State, and Local Health, Plumbing and Safety codes.

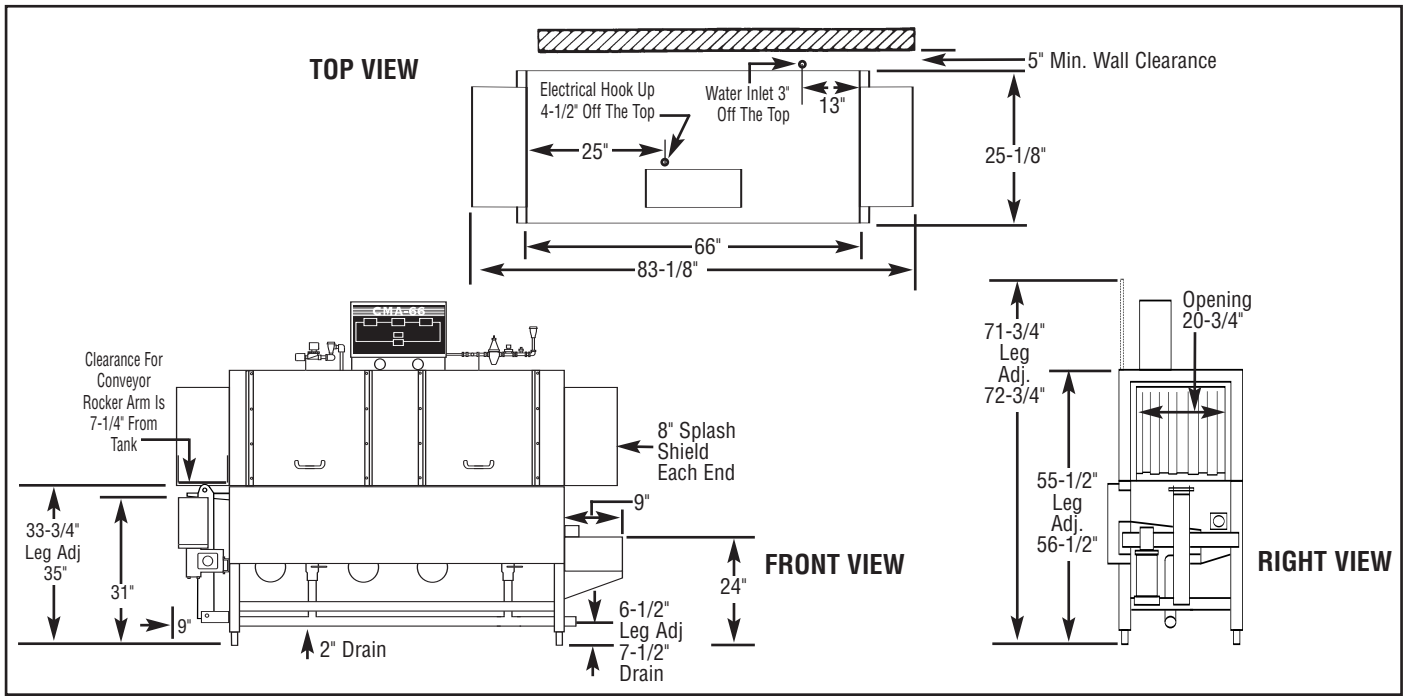

Specifications:

MODEL CMA-66L	USA	METRIC
OPERATING CAPACITY		
RACKS PER HOUR (NSF RATED)	242	242
CONVEYOR SPEED	6.75 FT./MIN.	(206 CM/MIN.)
DRAIN	2"	-
(3) WASH PUMP MOTORS HP	1	1
CONVEYOR MOTOR HP	1/3	1/3
WATER INLET - FILL	3/4"	(1.9cm)
WATER INLET - FINAL RINSE	1/2"	(1.27cm)
DRAIN SIZE	2"	(5.1cm)
FINAL RINSE PRESSURE	20 ± 5psi	(1.41 kg/cm²)
WASH TANK CAPACITY		
PRE-WASH	5.25 GAL	(20.0 L)
WASH	13.25 GAL	(50.0 L)
TOTAL	18.5 GAL	(70 L)
WASH PUMP CAPACITY		
EACH	52 GPM	(197 LPM)
OPERATING TEMPERATURE		
WASH	140°F-150°F	(60°C/65.5°C)
FINAL RINSE	140°F-150°F	(60°C/65.5°C)
WATER CONSUMPTION		
PER RACK (FINAL RINSE)	.8 GAL	(3 L)
PER HOUR (FINAL RINSE)	192 GPH	(726.8 LPH)

		USA	METRIC
DIMENSIONS			
DEPTH		25-1/8"	(64cm)
WIDTH		66"	(167.64cm)
HEIGHT		55-1/2"-56-1/2"	(140.97-143.51cm)
STANDARD TABLE HEIGHT		34"	(86cm)
MAX HEIGHT CLEARANCE FOR DISHES		19"	(48cm)
STANDARD DISHRACK		1	1
DIMENSIONS		19-3/4"X19-3/4"	(50X50cm)
ELECTRICAL RATING	**VOLTS**	**PHASE**	**AMPS**
	208	1	71
	240	1	78
	208	3	40
	240	3	44
	480	3	19
ELECTRIC TANK HEATER	208V/10kW		240V/12.75kW
SPECIFY DIRECTION OF RACK TRAVEL (RIGHT TO LEFT OR LEFT TO RIGHT) WHEN ORDERING			
SHIPPING WEIGHT			
APPROXIMATE		750#	(340.2kg)

Summary Specifications: Model CMA-66L

The Model CMA-66L low energy, chemical sanitizing conveyor dishwasher meets NSF, UL, and CUL sanitation and construction standards WITHOUT the use of a BOOSTER HEATER. The CMA-66L performs three separate washing functions including a built-in pre-wash, all in a 66" space. The CMA-66L washes up to 242 racks per hour and uses a minimum .8 gallons of water per rack while achieving sparkling, clean, dry dishes. Constructed entirely of stainless steel.

Available Models

- CMA-66L R/L Right to Left
- CMA-66L L/R Left to Right

Available Options

- Corner Feed Table Standard ***(FACTORY INSTALLED ONLY)***
- Alternative electrical options
- Also available at 205
- Stainless steel dishtables
- Vent Hood with 4" X 16" Vent and Damper Control (2 per set)
- Motor Cover

CMA Dishmachines 12700 Knott Street Garden Grove, CA 92841• 800-854-6417 • 714-898-8781 • Fax: 714-895-2141 • www.cmadishmachines.com

CMA reserves the right to modify specifications or discontinue models without prior notification.

Printed in the U.S.A.

© 2008 CMA, Inc.