CMA DISHMACHINES

CMA-44H

High Temperature
44" Conveyor
Dishwasher

FEATURES:

- Auto re-fill system.
- 205 racks / 820 covers per hour.
- Economical to operate. Uses only .94 gallons of water per cycle.
- Single control switch activation.
- Unique 3-stage washing process provides pre-wash, power wash and final rinse all in a 44" machine.
- Brass rocker arm bearing (extends longevity) newly engineered.
- Automatic soil purging system filters wash water and traps plate debris into an external tray. Tray can be easily removed for dumping contents.
- All stainless steel construction offers durable performance and years of trouble free operation.
- Upgraded high load power contactors.
- Chemical resistant industrial 10kW heater is proven to be more durable than commercial grade heaters.
- Large 19" high opening accommodates larger items and utensils.
- Auto start/stop makes operation safe and easy.
- Easy to remove and replace curtains.
- Includes table limit switch and rack saver clutch system that protects the machine, dishracks and table from damage.
- Two speed settings available for optimum cleaning performance.
- Chemical resistant mixing chamber.
- Auto Fill.
- Built-in Poly Pro™ scrap accumulator.

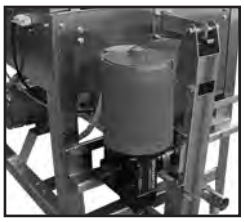

Rack saver clutch system with brass rocker arm bearing protects the machine, dishracks and table from damage.

Strategically located spray arms with spray pattern positioned for additional wash coverage.

Large 19" opening accommodates larger items and utensils.

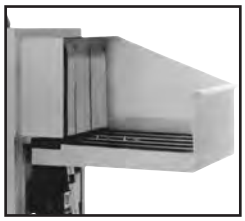

Shown with optional corner feed table. Available right or left.

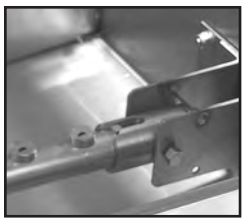

Easy to remove wash arms with captive end caps. ***Never lose another end cap again!***

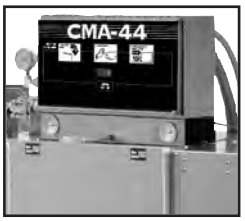

Single action control switch with easy to read temperature gauges and complete operating instructions.

CMA Dishmachines 12700 Knott Street Garden Grove, CA 92841• 800-854-6417 • 714-898-8781 • Fax: 714-895-2141 • www.cmadishmachines.com

CMA reserves the right to modify specifications or discontinue models without prior notification.

Printed in the U.S.A.

© 2008 CMA, Inc.

CMA-44H

High Temperature
44" Conveyor
Dishwasher

WARNING: Plumbing connections must be made by a qualified service company who will comply with all available Federal, State, and Local Health, Plumbing and Safety codes.

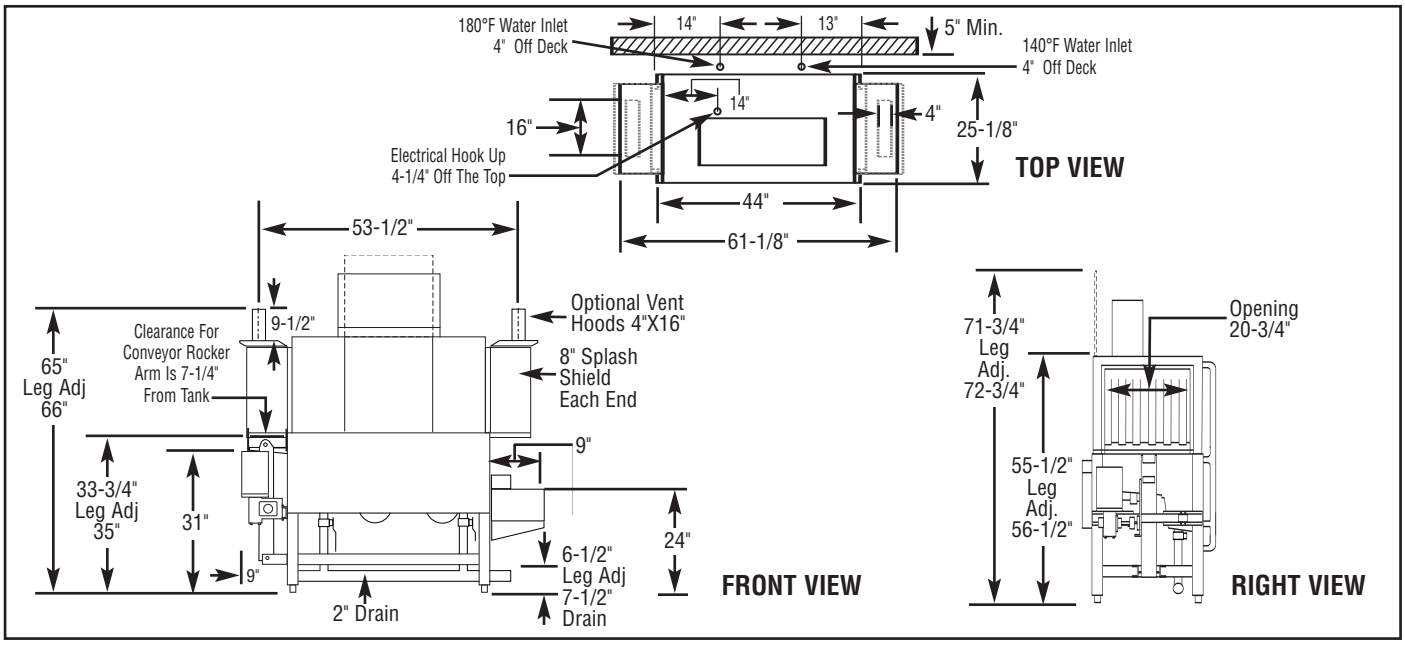

Specifications:

MODEL CMA-44H	USA	METRIC
OPERATING CAPACITY		
RACKS PER HOUR (NSF RATED)	205	205
CONVEYOR SPEED	5.7 FT./MIN.	(174 CM/MIN.)
DRAIN	2"	-
CONVEYOR MOTOR HP	1/3	1/3
WASH PUMP MOTORS HP (2)	1	1
WATER INLET - FILL	3/4"	(1.9cm)
WATER INLET - FINAL RINSE	1/2"	(1.27cm)
DRAIN SIZE	2"	(5.1cm)
FINAL RINSE PRESSURE	20 ± 5psi	(1.41 kg/cm²)
WASH TANK CAPACITY		
PRE-WASH	4.25 GAL	(16.0 L)
WASH	11.75 GAL	(44.5 L)
TOTAL	16.0 GAL	(60.5 L)
WASH PUMP CAPACITY		
EACH	52 GPM	(197 LPM)
OPERATING TEMPERATURE		
WASH - °F (MIN)	150°F-160°F	(68°C-71°C)
FINAL RINSE - °F (MIN)	180°F-195°F	(82°C-90°C)
WATER CONSUMPTION		
PER RACK (RINSE)	.94 GAL	(3.6 L)
PER HOUR (RINSE)	192 GPH	(726.6 LPH)

	USA	METRIC
DIMENSIONS		
DEPTH	25-1/8"	(64cm)
WIDTH	44"	(111.7cm)
HEIGHT	55-1/2"-56-1/2"	(140.97-143.51cm)
STANDARD TABLE HEIGHT	34"	(86cm)
MAX HEIGHT CLEARANCE FOR DISHES	19"	(48cm)
STANDARD DISHRACK	1	1
DIMENSIONS	19-3/4"X19-3/4"	(50X50cm)

ELECTRICAL RATING	VOLTS	PHASE	AMPS
	208	1	64
	240	1	71
	208	3	36
	240	3	40
	480	3	17

BOOSTER HEATER	208V/10kW	240V/12.75kW

SPECIFY DIRECTION OF RACK TRAVEL (RIGHT TO LEFT, LEFT TO RIGHT) WHEN ORDERING

CMA-44H EXHAUST VENTILATION REQUIREMENTS AT 100% CAPACITY CFM

ENTRANCE END 200 MAX	DISCHARGE END 400 MAX	TOTAL CFM 600 MAX

SHIPPING WEIGHT		
APPROXIMATE	662#	(300kg)

Summary Specifications: Model CMA-44H

The Model CMA-44H high temperature conveyor dishwasher meets NSF, UL, and CUL sanitation and construction standards utilizing 180°F final rinse water. The CMA-44H performs three separate washing functions including a built-in pre-wash, all in a 44" space. The CMA-44H washes up to 205 racks per hour and uses a minimum .94 gallons of water per rack while achieving sparkling, clean, dry dishes. Constructed entirely of stainless steel.

Available Models

- CMA-44H R/L Right to Left
- CMA-44H L/R Left to Right

Available Options

- Corner Feed Table ***(FACTORY INSTALLED ONLY)***
- Vent Hood with 4" x 16" Vent and Damper Control (2 per set)
- Alternative electrical options
- C-24 Hatco Booster Heater (40° rise), other sizes available
- Also available at 167 racks/hr
- Stainless steel dishtables
- Motor Cover
- Drain Water Tempering Kit

CMA Dishmachines 12700 Knott Street Garden Grove, CA 92841• 800-854-6417 • 714-898-8781 • Fax: 714-895-2141 • www.cmadishmachines.com

CMA reserves the right to modify specifications or discontinue models without prior notification.

Printed in the U.S.A.

© 2008 CMA, Inc.