Ice-O-Matic®

ICEU300/305 - Self Contained Cube Ice Maker

ICEU300

Features

- Space saving 30" (762 mm) wide undercounter design.
- Produces up to 356 lbs (162 kg) of ice per day.
- *Harvest Assist* provides consistent ice production for the life of the ice maker while reducing energy consumption and increasing capacity.
- *Pure Ice®* exclusively by Ice-O-Matic. Built-in antimicrobial protection for the life of the ice maker inhibits bacteria growth on ice maker surfaces. Ice-O-Matic's optional water filtration system provides protection against unpleasant tastes, odors and scale formation.
- Durable, electroless nickel plating on all evaporator plates ensures reliability.
- *Longest warranty in the industry.* Purchase an Ice-O-Matic water filter with your cube ice maker, replace the filter every six months, and the evaporator warranty is extended to 7 years parts and labor *(available in the U.S. and Canada only).*
- Constructed from corrosion-resistant stainless steel and fingerprint-proof plastic.

Options & Accessories

Water Filters			
Ice Machine Model	Manifold		Inline
	System	Replacement	System
ICEU300	IFQ1	IOMQ (1)	IFI4C / IFI8C
ICEU305	IFQ1	IOMQ (1)	IFI4C / IFI8C

Ice Maker Warranty

Every Ice-O-Matic ice maker is backed by a warranty that provides both parts and labor coverage.

- Three years **Parts** and **Labor**.
- Five years **Parts** coverage on the evaporator and compressor.
- Seven years **Parts** and **Labor** on the evaporator when you purchase an Ice-O-Matic water filter with your cube ice maker and replace the filter every six months *(available in the U.S. and Canada only)*.

Ice Form

Full Cube	
W x D x H (in)	⅞ x ⅞ x ⅞
W x D x H (mm)	22 x 22 x 22

Half Cube	
W x D x H (in)	⅞ x ⅞ x ⅜
W x D x H (mm)	22 x 22 x 10

Space-Saving Solutions

- Front air discharge design for compact spaces.
- Low profile top saves counter space.
- Stores up to 130 lbs (59 kg) of ice.
- Easy front access to ice.
- Available with an air-cooled or water-cooled condenser.

ICEU300/305 Self Contained Cube Ice Maker

11100 E. 45th Avenue
Denver, CO 80239

Phone: 1. 866. PURE. ICE
Fax: 303. 371. 6296
www.iceomatic.com

Rev: A-02/09
Part: 1022

Ice-O-Matic®

ICEU300/305 Self Contained Cube Ice Maker

Air and Water Cooled

A. Ice maker water in ⅜" FPT.
B. Bin and ice maker drain, ¾" FPT.
C. Cord on HSV, hole on all others for electrical connections, ⅞".
D. Condenser water in, ⅜" FPT *(water cooled units only)*.
E. Condenser water out, ½" FPT *(water cooled units only)*.

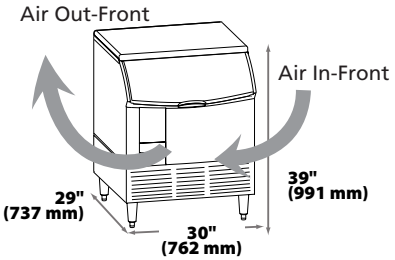

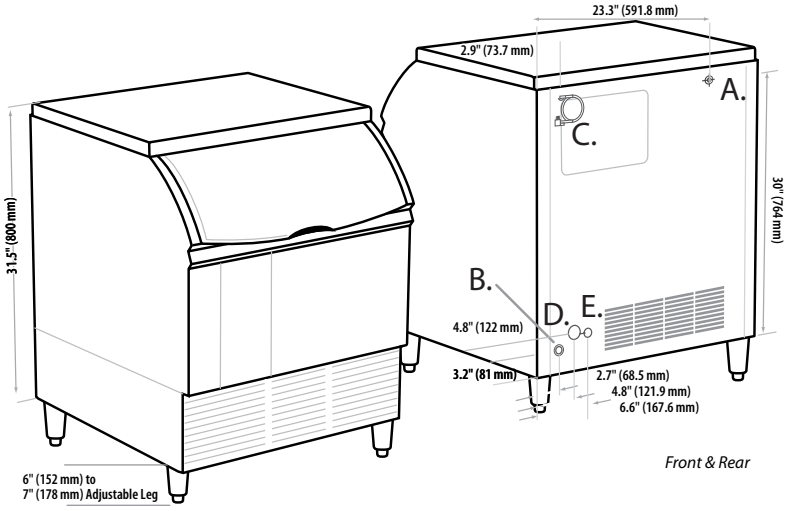

Operating Requirements

	Minimum	Maximum	
		60 Hz	50Hz
Ambient Temp. Range Air	50˚F (10˚C)	100˚F (38˚C)	110˚F (43˚C)
Water Temp.	40˚F (4.4˚C)	100˚F (38˚C)	110˚F (43˚C)
Water Pressure	20 PSIG (1.4 BAR)	60 PSIG (4.1 BAR)	

Dimensions

All Models	
W x D x H (inches)	30 x 29 x 39
W x D x H (mm)	762 x 737 x 991

Specifications

Model Number	Cond. Unit	Ice Production per 24hrs		Water Usage gallons per 100 lbs of Ice 90°F air/70°F water		kWH Used per 100 lbs of ice @ 90°F air/ 70°F water	Voltage Characteristics	Min. Circuit Ampacity	Fuse Size	Approx. BTUs per hour
		70°F air/ 50°F water lbs (kg)	90°F air/ 70°F water lbs (kg)	Potable	Condenser					
ICEU300A★	Air	309 (140)	228 (104)	32.9	-	8.6	115/60/1	13.1	15	5,928
ICEU300W	Water	356 (162)	296 (135)	35.6	175	5.7	115/60/1	11.1	15	6,097
ICEU305A	Air	299 (136)	223 (101)	30.8	-	7.7	230/50/1	6.6	16	5,392
ICEU305W	Water	314 (143)	267 (121)	33.9	145	5.4	230/50/1	8.3	16	5,353

NOTES:
Number of Wires: 3 (including ground)
Approx. Shipping Weight lbs (kg): ICEU300A 206 (94) • ICEU300W 203 (92) • ICEU305A 206 (94) • ICEU305W 203 (92)
Refrigerant Type: R404A

★ ENERGY STAR qualified machine.
Please see our website www.iceomatic.com for the latest list of ENERGY STAR qualified machines and available rebates

11100 E. 45th Avenue
Denver, CO 80239

Phone: **1. 866. PURE. ICE**
Fax: **303. 371. 6296**
www.iceomatic.com

Rev: **A-02/09**
Part: **1022**