Ice-O-Matic

EF250 - Self Contained Flake Ice Maker

EF250

Features

- Produces up to 400 lbs (182 kg) of ice per day.
- Constructed with a rugged stainless steel transport system enclosed in polyurethane insulation.
- Removes excess water by pushing the flaked ice through an extrusion process—the result is high quality flaked ice which is ideal for medical, supermarket or restaurant applications.
- Constructed from sturdy, corrosion-resistant stainless steel.
- Filter Free Air -No air filter to change.

Options & Accessories

Water Filters			
Ice Machine Model	Manifold		Inline
	System	Replacement	System
EF250	IFQ1	IOMQ (1)	IFI4C / IFI8C

Ice Maker Warranty

Every Ice-O-Matic ice maker is backed by a warranty that provides both parts and labor coverage.

Parts & Labor

- Two years **Parts** and **Labor**.
- Five years **Parts** coverage on the compressor

Ice Form

Space-Saving Solutions

- Self-contained insulated storage available in 143 lbs (65 kg) or 213 lbs (97 kg).
- Your choice of 32" (813 mm) or 38" (965 mm) wide cabinets.
- Ultra low profile - 41" (1041mm) tall
- Air intake on only 1 side

c UL us NSF Ice-O-Matic ISO 9001 Certified

EF250 Self Contained Flake Ice Maker

11100 E. 45th Avenue
Denver, CO 80239

Phone: 1. 866. PURE. ICE
Fax: 303. 371.6296
www.iceomatic.com

Rev: A-2/09
Part: 2000

Ice-O-Matic®

EF250 Self Contained Flake Ice Maker

Air Cooled

Please note: air-cooled units require 6" (152 mm) clearance for air intake and exhaust.

A. Ice maker potable water in, ⅜" FPT.
B. Drain, ½" i.d. plastic tubing.
C. Hole for electrical connections.
D· ¾" Bin Drain

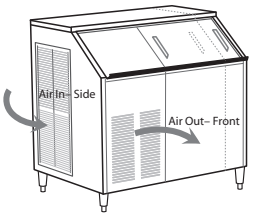

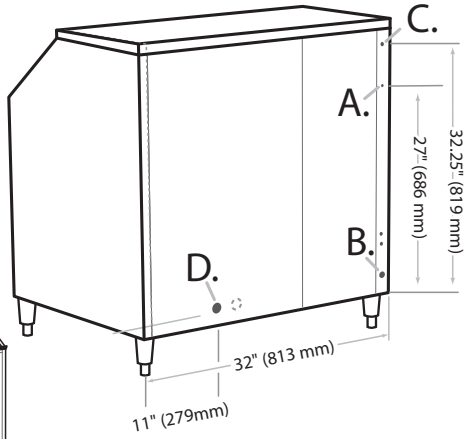

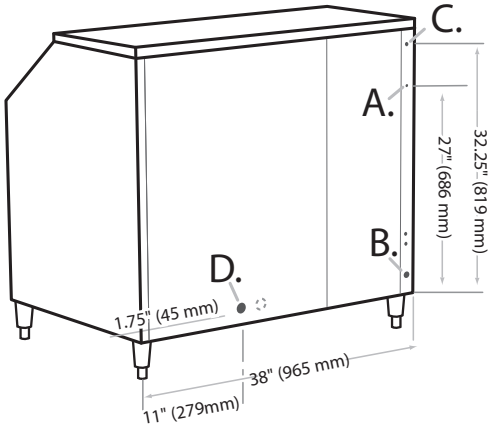

Rear View

Operating Requirements

	Minimum	Maximum
Ambient Temp. Range Air	50˚F (10˚C)	110˚F (43˚C)
Water Temp.	40˚F (4.4˚C)	100˚F (38˚C)
Water Pressure	20 PSIG (1.4 BAR)	60 PSIG (4.1 BAR)

Dimensions

Models	Size	
	W x D x H (inches)	W x D x H (mm)
EF250A32S	32" x 28" x 41"	813 mm x 711 mm x 1,041 mm
EF250A38S	38" x 28" x 41"	965 mm x 711 mm x 1,041 mm

Specifications

Model Number	Cabinet Width inch (mm)	Bin Size lbs (kg)	Cond. Unit	Ice Production per 24hrs 70°F air/ 50°F water lbs (kg)	Ice Production per 24hrs 90°F air/ 70°F water lbs (kg)	Water Usage gallons per 100 lbs of ice 90°F air/ 70°F water	kWH Used per 100 lbs of ice @ 90°F air/ 70°F water	Voltage Characteristics	Min. Circuit Ampac-ity	Fuse Size	Approx. BTUs per hour
EF250A32S	32 (813)	143 (65)	Air	400 (182)	319 (145)	12	5.6	115/60/1	12.4	15	4,233
EF250A38S	38 (965)	213 (97)	Air	400 (182)	319 (145)	12	5.6	115/60/1	12.4	15	4,233

NOTES:
Number of Wires: 3 (including ground)
Approx. Shipping Weight lbs (kg): EF250A32S 240 (109) • EF250A38S 250 (114)
Refrigerant Type: R404A

11100 E. 45th Avenue
Denver, CO 80239

Phone: **1. 866. PURE. ICE**
Fax: **303. 371.6296**
www.iceomatic.com

Rev: **A-02/09**
Part: **2000**