Hoshizaki reserves the right to change specifications without notice.

Item # _____

Project: _____

Qty: _____

*AutoCad available on KCL

AM-150BWF

SELF-CONTAINED CUBER WITH BUILT-IN STORAGE BIN

AM-150BWF
4/08
Item # 13228

CUBER DIMENSIONS
W x D x H

AM-150BWF
$27^{11/16}$ x $27^{15/16}$ x 39*
*with 6" adj. legs

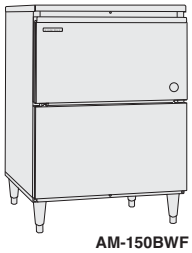

AM-150BWF

AM-150BWF
Water-Cooled
Shown

- Up to 150 lbs. of ice production per 24 hours
- Durable stainless steel exterior
- Up to 88 lbs. of built-in storage capacity
- Easily disassembled water circuit for easy cleaning
- Front in, front out airflow (Air-cooled model only)
- Fewer moving parts for longer life
- Drop down door
- R-404A Refrigerant

NSF c UL US LISTED ISO HOSHIZAKI • ISO 9001

Warranty

Valid in United States, Canada, Puerto Rico, & U.S. Territories. Contact factory for warranty in other countries.

Three Year - Parts & Labor on entire machine.
Five Year - Parts on compressor and air-cooled condenser coil.
Five Year - Parts on evaporator.

© HOSHIZAKI AMERICA, INC.

618 Hwy. 74 S., Peachtree City, GA 30269 | TEL 1-800-438-6087 | FAX 1-800-345-1325 | www.hoshizaki.com

AM-150BWF
SELF-CONTAINED CUBER WITH BUILT-IN STORAGE BIN

DIMENSIONS
W x D x H

AM-150BWF
27 11/16 x 27 15/16 x 39*
*with 6" adj. legs

• Water-cooled

WATER-COOLED

Water Temp° F.		50°
Air Temp° F.	70°	150 lbs.

UTILITY CONSUMPTION (AIR 70°F/WATER 50°F)

Model Number	Ice Production Per Cycle Lbs.	Cubes	KWH per 100 LBS.	Potable Water Gal. per 100 lbs.	Condenser Water Gal. per 100 lbs.
AM-150BWF	1.78	60	9.0	31	92

SPECIFICATIONS

Model Number	Condenser	Amperage	Min. Circuit Ampacity	Shipping Weight
AM-150BWF	Water-Cooled	7.0	N/A	192 lbs.

AM CUBE DIMENSIONS

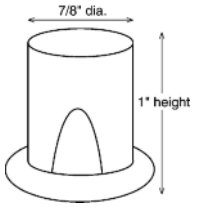

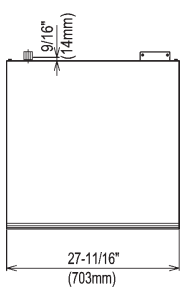

TOP DIMENSIONS

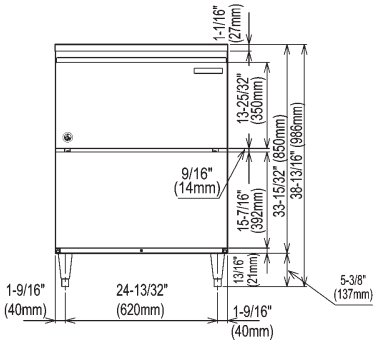

FRONT DIMENSIONS

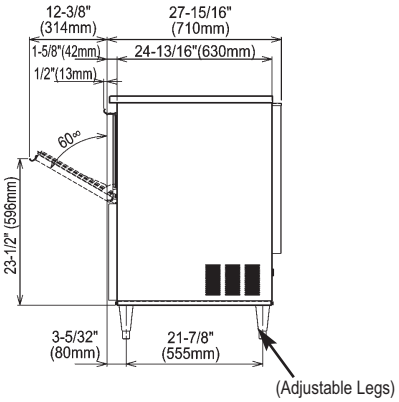

SIDE DIMENSIONS

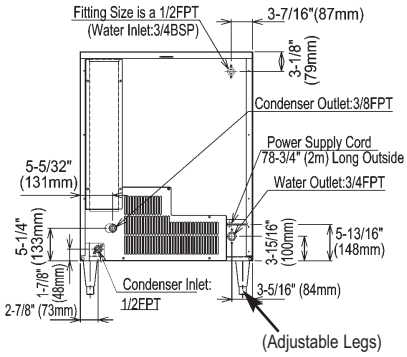

BACK DIMENSIONS

ELECTRICAL & PLUMBING/AM-150BWF

- 115V/60/1
- 15 amp Max Fuse/HACR Breaker Size
- 1/2" OD copper or equivalent independent potable water supply
- 3/4" independent drain connection
- 1/2" FPT Water Inlet

OPERATING LIMITS

• Ambient Temp Range	50 - 100°F
• Water Temp Range	41 - 90°F
• Water Pressure	7 - 113psig
• Voltage Range	104 - 127V

© HOSHIZAKI AMERICA, INC.

618 Hwy. 74 S., Peachtree City, GA 30269 | TEL 1-800-438-6087 | FAX 1-800-345-1325 | www.hoshizaki.com | Printed in U.S.A.