Hoshizaki reserves the right to change specifications without notice.

Item # _____

Project: _____

Qty: _____

*AutoCad available on KCL

DCM-270BAH

SANITARY CUBELET ICE MACHINE/DISPENSER

DCM-270BAH
5/06
Item # 13116

DIMENSIONS
W x D x H

DCM-270BAH
$16^{9/16}$ x $24^{3/16}$ x $31^{7/8}$*
*with 4" legs

SD-270
$16^{1/2}$ x 24 x $35^{3/16}$

DCM-270

SD-270
optional
stand

DCM-270BAH
Air-Cooled
Shown

DCM-270BAH

- CleanCycle12® - Every 12 hours, unit performs 15 minute purge to rid itself of impurities
- Durable stainless steel exterior
- Up to 282 lbs. of ice production per 24 hours
- Easy to chew, cubelet ice
- Self contained design reducing opportunities for cross contamination
- Dispenses ice and water
- Removable air filter
- Stainless steel internal auger
- R-404A Refrigerant

SD-270 Stand

- Heavy duty stand for floor model icemaker/dispenser
- Corrosion resistant stainless steel exterior
- Easy cleaning with attractive appearance
- Locking door

Warranty

Valid in United States, Canada, Puerto Rico, & U.S. Territories. Contact factory for warranty in other countries.

Two Year - Parts & Labor on entire machine.

Five Year - Parts on: hermetic compressor, air-cooled fin and tube type condenser.

© HOSHIZAKI AMERICA, INC.

618 Hwy. 74 S., Peachtree City, GA 30269 | TEL 1-800-438-6087 | FAX 1-800-345-1325 | www.hoshizaki.com

DCM-270BAH
SANITARY CUBELET ICE MACHINE/DISPENSER

DIMENSIONS
W x D x H

DCM-270BAH
$16^{9/16}$ x $24^{3/16}$ x $31^{7/8*}$
*with 4" legs

SD-270
$16^{1/2}$ x 24 x $35^{3/16}$

- Air-cooled
- Optional stand with locking door

AIR-COOLED

Water Temp° F.		50°	70°	90°
Air Temp° F.	70°	282	271	259
	80°	248	238	228
	90°	219	215	201

UTILITY CONSUMPTION

Model Number	KWH per 100 LBS.		GAL per 100 LBS.	
	90/70	70/50	90/70	70/50
DCM-270BAH	7.6	5.5	12.0	12.0

SPECIFICATIONS

Model Number	Condenser	Amperage	Shipping Weight
DCM-270BAH	Air-Cooled	8.5	165 lbs.
SD-270	N/A	N/A	95 lbs.

Flaked Ice compacted into Cubelets by Extruding Head Cutter and stored in an Insulated Bin with Continuous Agitation during Dispensing and Direct Dispensing Auger

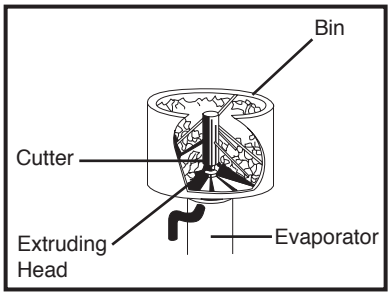

Evaporator

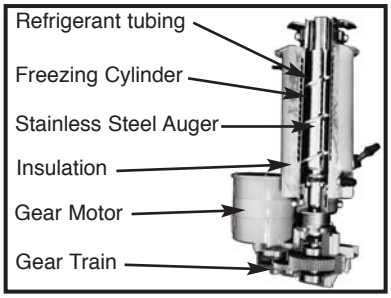

9 lb. Capacity Built-in Bin

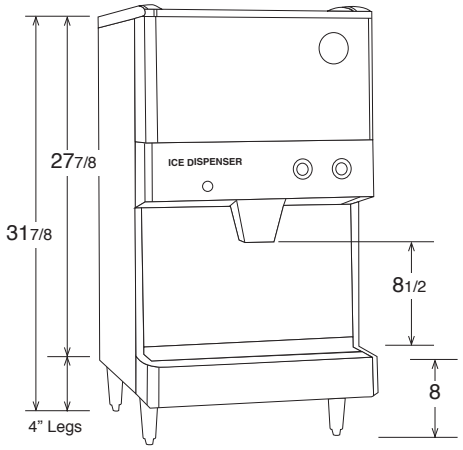

DCM-270

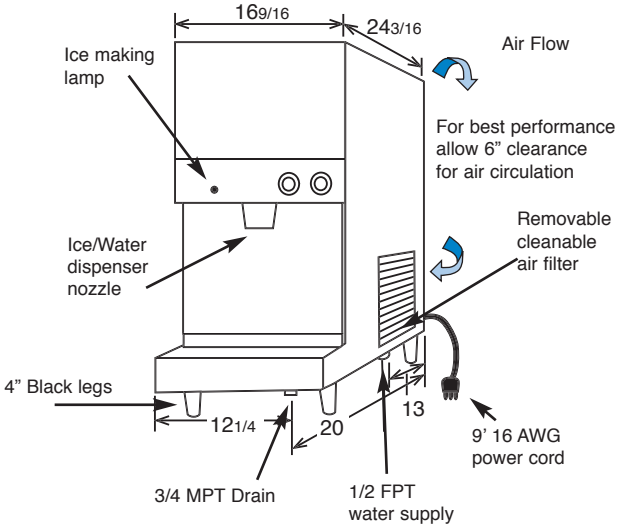

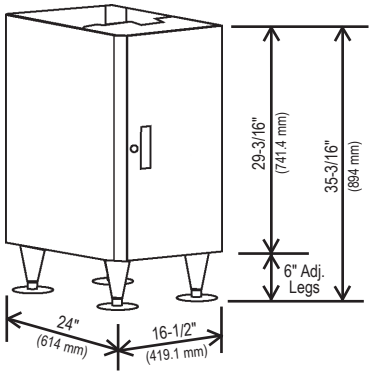

SD-270

ELECTRICAL & PLUMBING/DCM-270BAH

- 115V/60/1
- 15 amp cord connection
- 1/2" FPT Water Inlet
- 3/4" MPT Drain

OPERATING LIMITS

• Ambient Temp Range	45 - 100°F
• Water Temp Range	45 - 90°F
• Water Pressure	10 - 113psig
• Voltage Range	104 - 127V

SERVICE

- Panels easily removed and all components accessible for service.
- Removable/cleanable air filter.

© HOSHIZAKI AMERICA, INC.

618 Hwy. 74 S., Peachtree City, GA 30269 | TEL 1-800-438-6087 | FAX 1-800-345-1325 | www.hoshizaki.com | Printed in U.S.A.