Hoshizaki reserves the right to change specifications without notice.

Item # _____

Project: _____

Qty: _____

*AutoCad available on KCL

DCM-270BAH-OS

OPTI-SERVE SERIES

SANITARY CUBELET ICE MACHINE/DISPENSER

DCM-270BAH-OS
5/06
Item # 13159

DIMENSIONS
W x D x H

DCM-270BAH-OS
$16^{9/16}$ x $24^{1/8}$ x $31^{11/16}$*
*with 4" legs

SD-270
$16^{1/2}$ x 24 x $35^{3/16}$

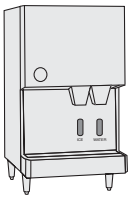

DCM-270

SD-270
optional
stand

DCM-270BAH-OS
Air-Cooled
Shown on an optional
SD-270 Stand

DCM-270BAH-OS

- CleanCycle12® - Every 12 hours, unit performs 15 minute purge to rid itself of impurities
- LED Remote sensor for hands-free operation
- Sealed LED housing prevents moisture from entering, eliminating the possibility of an electrical short
- Durable stainless steel exterior
- Up to 288 lbs. of ice production per 24 hours
- Easy to chew, cubelet ice
- Self contained design reducing opportunities for cross contamination
- Dispenses ice and water
- Removable air filter
- Stainless steel internal auger
- R-404A Refrigerant

SD-270 Stand

- Heavy duty stand for floor model icemaker/dispenser
- Corrosion resistant stainless steel exterior
- Easy cleaning with attractive appearance
- Locking door

Warranty

Valid in United States, Canada, Puerto Rico, & U.S. Territories. Contact factory for warranty in other countries.

Two Year - Parts & Labor on entire machine.

Five Year - Parts on: hermetic compressor, air-cooled fin and tube type condenser.

© HOSHIZAKI AMERICA, INC.

618 Hwy. 74 S., Peachtree City, GA 30269 | TEL 1-800-438-6087 | FAX 1-800-345-1325 | www.hoshizaki.com

DCM-270BAH-OS SANITARY CUBELET ICE MACHINE/DISPENSER
OPTI-SERVE SERIES

DIMENSIONS
W x D x H

DCM-270BAH-OS
$16^{9/16}$ x $24^{3/16}$ x $31^{7/8*}$
*with 4" legs

SD-270
$16^{1/2}$ x 24 x $35^{3/16}$

- Hands-free ice and water dispenser
- Optional stand with locking door

AIR-COOLED

Water Temp° F.		50°	70°	90°
Air Temp° F.	70°	288	276	265
	80°	254	243	233
	90°	224	220	205

UTILITY CONSUMPTION

Model Number	KWH per 100 LBS.		GAL per 100 LBS.	
	90/70	70/50	90/70	70/50
DCM-270BAH-OS	7.3	5.3	12.0	12.0

SPECIFICATIONS

Model Number	Condenser	Amperage	Shipping Weight
DCM-270BAH-OS	Air-Cooled	8.5	166 lbs.
SD-270	N/A	N/A	89 lbs.

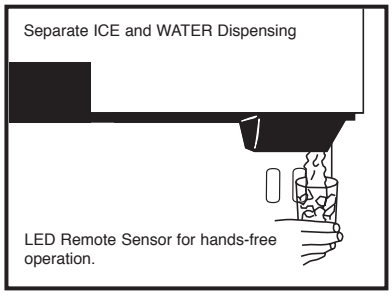

Flaked Ice compacted into Cubelets by Extruding Head Cutter and stored in an Insulated Bin with Continuous Agitation during Dispensing and Direct Dispensing Auger

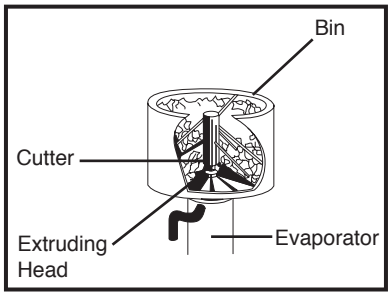

Evaporator

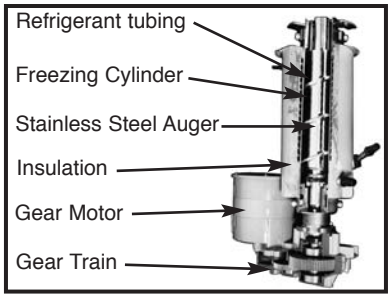

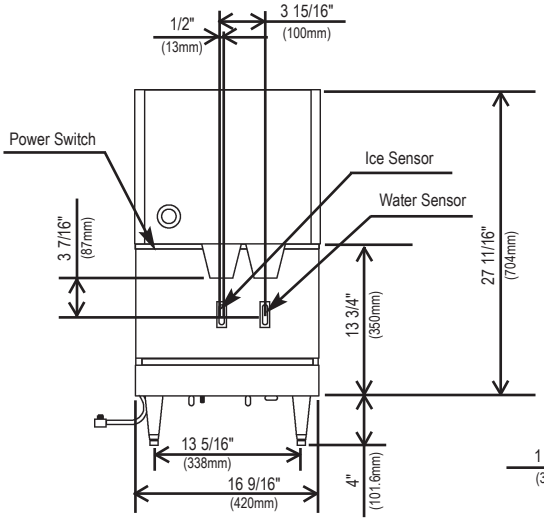

FRONT VIEW

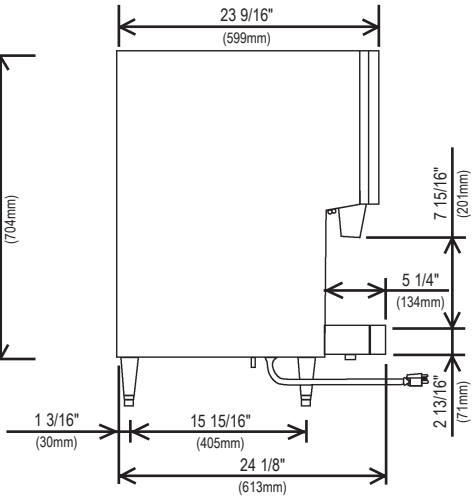

SIDE VIEW

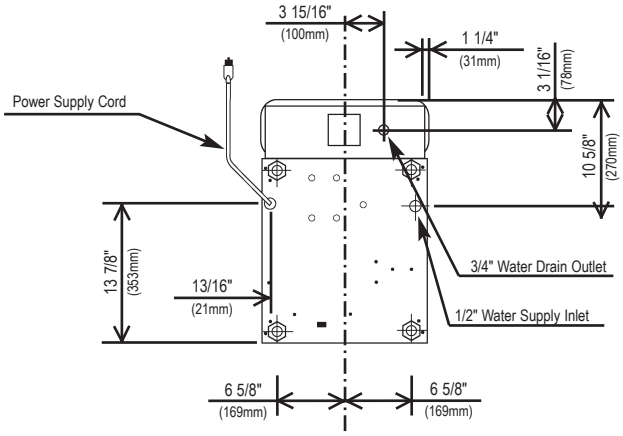

BOTTOM VIEW

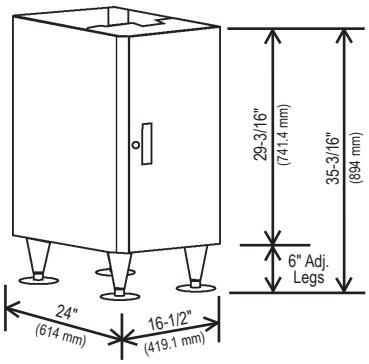

SD-270

ELECTRICAL & PLUMBING/DCM-270BAH-OS

- 115V/60/1
- 15 amp cord connection

OPERATING LIMITS

• Ambient Temp Range	45 - 100°F
• Water Temp Range	45 - 90°F
• Water Pressure	10 - 113psig
• Voltage Range	104 - 127V

SERVICE

- Panels easily removed and all components accessible for service.
- Removable/cleanable air filter.

© HOSHIZAKI AMERICA, INC.

618 Hwy. 74 S., Peachtree City, GA 30269 | TEL 1-800-438-6087 | FAX 1-800-345-1325 | www.hoshizaki.com | Printed in U.S.A.