Hoshizaki reserves the right to change specifications without notice.

Item # _____

Project: _____

Qty: _____

*AutoCad available on KCL

DCM-750B_H-OS

OPTI-SERVE SERIES

SANITARY CUBELET ICE MACHINE/DISPENSER

DCM-750B_H-OS
4/06
Item # 13150

DIMENSIONS
W x D x H

DCM-750B_H-OS
$34^{1/16}$ x $28^{1/2}$ x $48^{1/16}$

SD-700
$34^{1/4}$ x $28^{1/4}$ x $32^{1/2}$

SD-750
34 x 28 x $32^{3/4}$

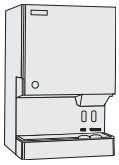

DCM-750
Countertop

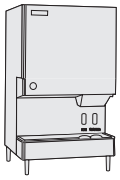

DCM-750
Countertop
with optional
6" legs

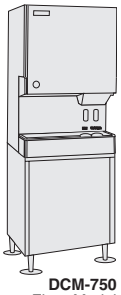

DCM-750
Floor Model
with optional
stand

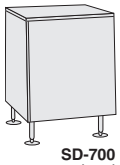

SD-700
optional
stand

SD-750
optional
stand

DCM-750BAH-OS
Air-Cooled
Shown on an optional
SD-750 Stand

DCM-750BWH-OS
Water-Cooled

DCM-750B_H-OS

- CleanCycle12® - Every 12 hours, unit performs 15 minute purge to rid itself of impurities
- LED Remote sensor for hands-free operation
- Sealed LED housing prevents moisture from entering, eliminating the possibility of an electrical short
- Corrosion resistant stainless steel exterior
- Up to 803 lbs. of ice production per 24 hours, with 95 lbs. built-in storage
- Easy to chew, cubelet ice
- Self contained design reducing opportunities for cross contamination
- Dispenses ice and water
- Removable air filters (Air-cooled model only)

SD-700 Stand / SD-750 Stand

- Heavy duty stand for floor model icemaker/dispenser
- Corrosion resistant stainless steel exterior
- Easy cleaning with attractive appearance
- Locking doors standard on SD-750

Warranty

Valid in United States, Canada, Puerto Rico, & U.S. Territories. Contact factory for warranty in other countries.

Two Year - Parts & Labor on entire machine.

Five Year - Parts on: Compressor, air-cooled condenser.

© HOSHIZAKI AMERICA, INC.

618 Hwy. 74 S., Peachtree City, GA 30269 | TEL 1-800-438-6087 | FAX 1-800-345-1325 | www.hoshizaki.com

DCM-750B_H-OS
SANITARY CUBELET ICE MACHINE/DISPENSER - OPTI-SERVE SERIES

DIMENSIONS
W x D x H

DCM-750B_H-OS
34 1/16 x 28 1/2 x 48 1/16

SD-700
34 1/4 x 28 1/4 x 32 1/2

SD-750
34 x 28 x 32 3/4

- Hands-free ice machine/dispenser
- Optional stand
- Optional stand with locking doors

AIR-COOLED

Air Temp° F.	Water Temp° F. 50°	70°	90°
70°	803	770	726
80°	684	645	608
90°	573	567	509

WATER-COOLED

Air Temp° F.	Water Temp° F. 50°	70°	90°
70°	744	719	708
80°	696	684	673
90°	662	654	640

UTILITY CONSUMPTION

Model Number	KWH per 100 LBS. 90/70	Potable Water Gal. per 100 lbs.
DCM-750BAH-OS	6.3	12.0
DCM-750BWH-OS	5.1	12.0

SPECIFICATIONS

Model Number	Condenser	Amperage	Min. Circuit Ampacity	Shipping Weight
DCM-750BAH-OS	Air-Cooled	20.4	20	420 lbs.
DCM-750BWH-OS	Water-Cooled	19.5	20	420 lbs.
SD-700	N/A	N/A	N/A	165 lbs.
SD-750	N/A	N/A	N/A	125 lbs.

CUBELET DIMENSIONS

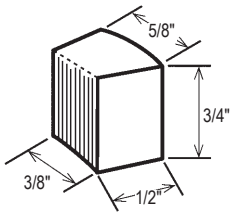

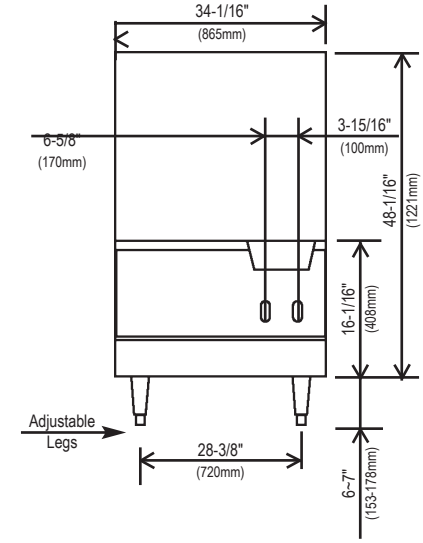

FRONT VIEW

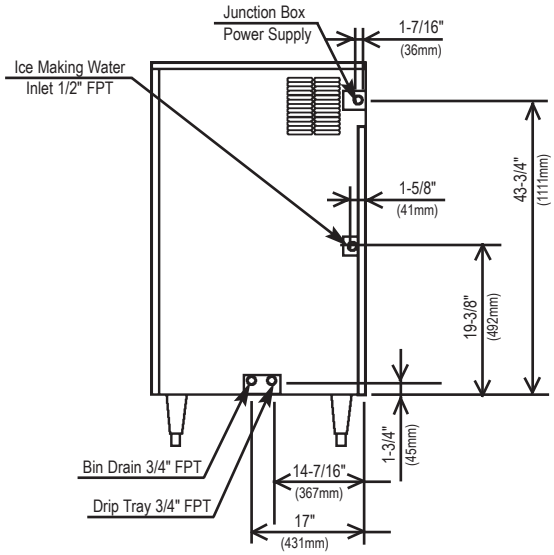

AIR-COOLED UNIT

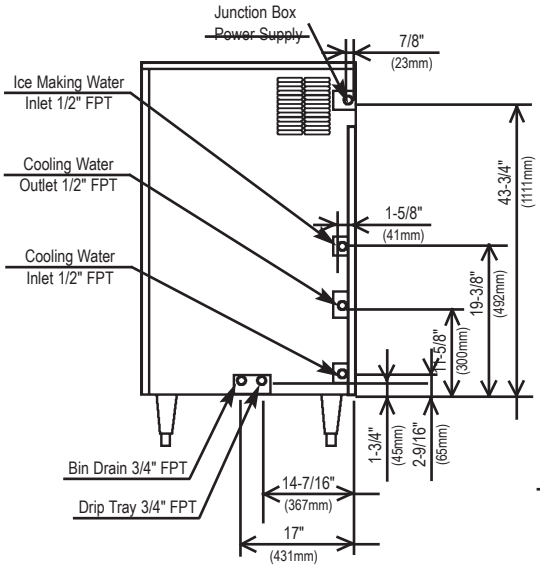

WATER-COOLED UNIT

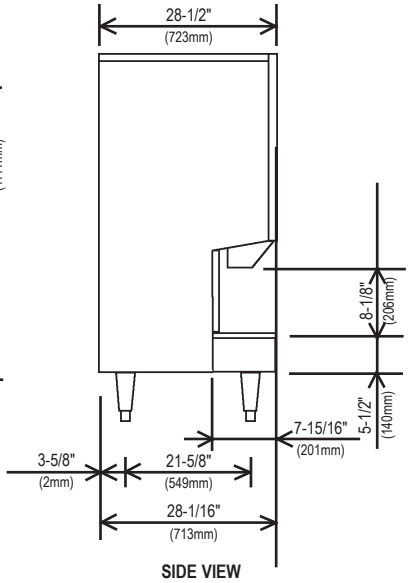

SIDE VIEW

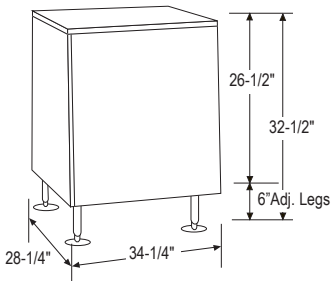

SD-700

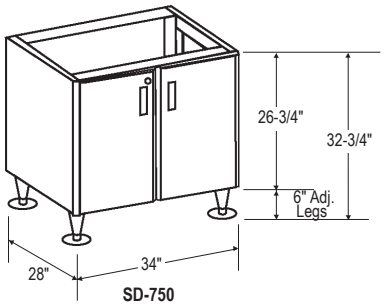

SD-750

ELECTRICAL & PLUMBING/DCM-750BAH-OS

- 115V/60/1
- 20 amp Max Fuse Size
- 1/2" OD copper or equivalent independent water supply
- 3/4" independent drain connection

OPERATING LIMITS

• Ambient Temp Range	45 - 100°F
• Water Temp Range	45 - 90°F
• Water Pressure	10 - 113psig
• Voltage Range	104 - 127V

SERVICE

- Panels easily removed and all components accessible for service.
- Removable/cleanable air filter.

© HOSHIZAKI AMERICA, INC.

618 Hwy. 74 S., Peachtree City, GA 30269 | TEL 1-800-438-6087 | FAX 1-800-345-1325 | www.hoshizaki.com | Printed in U.S.A.