Hoshizaki reserves the right to change specifications without notice.

Item # _____

Project: _____

Qty: _____

*AutoCad available on KCL

F-300/500BAF

SELF-CONTAINED FLAKER WITH BUILT-IN STORAGE

F-300/500BAF
3/06
Item # 13142

FLAKER DIMENSIONS
W x D x H

F-300BAF
36 x 24 x 39*
*with 6" legs

F-500BAF
38 x 29 x 42*
*with 6" legs

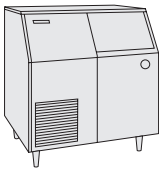

F-300BAF

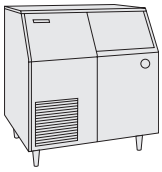

F-500BAF

F-300BAF
Air-Cooled

F-500BAF
Air-Cooled
Shown

F-300BAF

- Up to 303 lbs. of ice production per 24 hours
- Up to 110 lbs. built-in storage

F-500BAF

- Up to 478 lbs. of ice production per 24 hours
- Up to 250 lbs. built-in storage

F-300BAF & F-500BAF

- Designed for long life dependability
- Corrosion resistant stainless steel
- Automatic system flush when bin control is activated
- Gear motor protected from overload
- Removable air filter
- R-404 Refrigerant
- Scoop - Protected by *HoshiGuard* Antimicrobial Agent HOSHIGUARD

Warranty

Valid in United States, Canada, Puerto Rico, & U.S. Territories. Contact factory for warranty in other countries.

Two Year - Parts & Labor on entire unit.

Five Year - Parts on: Compressor, air-cooled condenser coil.

© HOSHIZAKI AMERICA, INC.

618 Hwy. 74 S., Peachtree City, GA 30269 | TEL 1-800-438-6087 | FAX 1-800-345-1325 | www.hoshizaki.com

F-300/500BAF
SELF-CONTAINED FLAKER WITH BUILT-IN STORAGE BIN

DIMENSIONS
W x D x H

F-300BAF
36 x 24 x 39*

F-500BAF
38 x 29 x 42*
*with 6" legs

- Air-cooled
- Air-cooled

F-300BAF / AIR-COOLED

Water Temp° F.		50°	70°	90°
Air Temp° F.	70°	303	290	278
	80°	267	256	246
	90°	236	232	218

F-500BAF / AIR-COOLED

Water Temp° F.		50°	70°	90°
Air Temp° F.	70°	478	458	438
	80°	419	400	383
	90°	366	359	335

UTILITY CONSUMPTION

Model Number	Approximate Electric		KWH per 100 LBS.	
	90/70	70/50	90/70	70/50
F-300BAF	651W	613W	6.7	4.8
F-500BAF	900W	854W	6.0	4.3

SPECIFICATIONS

Model Number	Condenser	Amperage	Min. Circuit Ampacity	Shipping Weight
F-300BAF	Air-Cooled	9.0	N/A	210 lbs.
F-500BAF	Air-Cooled	10.4	20	270 lbs.

STORAGE BINS

Model Number	Application Capacity
F-300BAF	Built-in 110 lb. capacity
F-500BAF	Built-in 250 lb. capacity

- Circuit breaker or fuse protects gear motor from overload.
- Gear motor runs one minute after termination of ice making to clear all ice form evaporator.

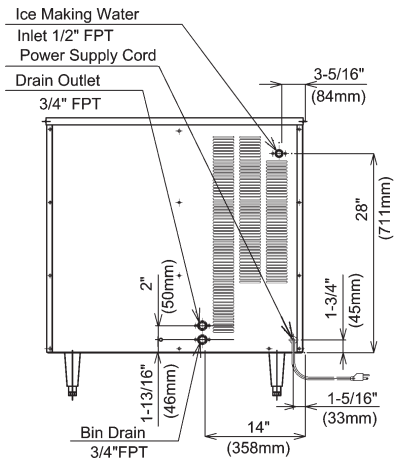

BACK VIEW

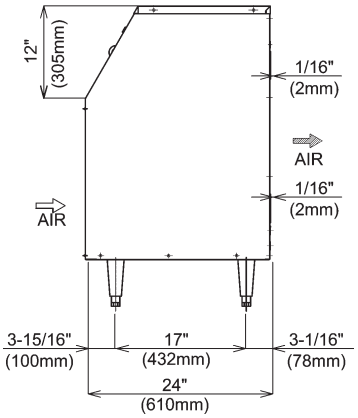

SIDE VIEW

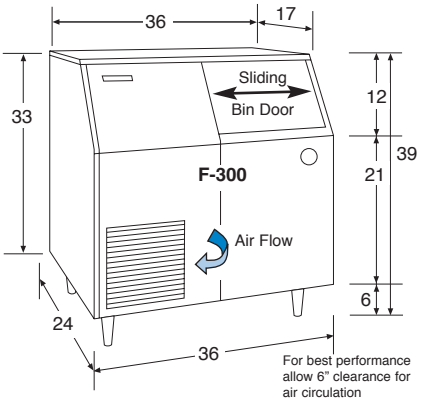

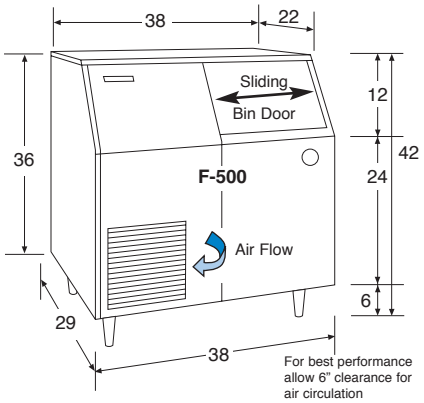

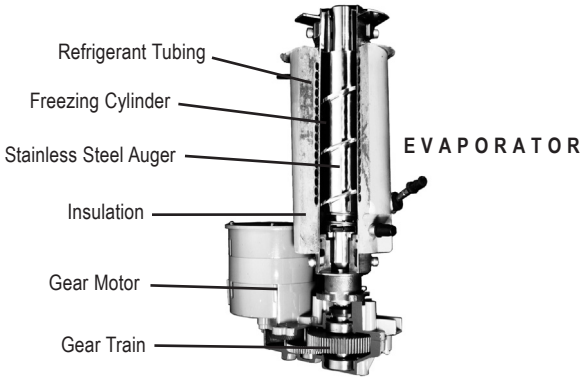

ELECTRICAL & PLUMBING/F-300/500BAF

- 115V/60/1
- 15 amp Max Fuse Size - F-300BAF
- 20 amp Max Fuse Size - F-500BAF
- 3/8" OD copper or equivalent independent potable water supply
- 3/4" FPT independent drain connection

OPERATING LIMITS

• Ambient Temp Range	45 - 100°F
• Water Temp Range	45 - 90°F
• Water Pressure	10 - 113psig
• Voltage Range	104 - 127V

SERVICE

- Panels easily removed and all components accessible for service.
- Removable/cleanable air filters

© HOSHIZAKI AMERICA, INC.

618 Hwy. 74 S., Peachtree City, GA 30269 | TEL 1-800-438-6087 | FAX 1-800-345-1325 | www.hoshizaki.com | Printed in U.S.A.