Hoshizaki reserves the right to change specifications without notice.

Item # _____

Project: _____

Qty: _____

*AutoCad available on KCL

F-330BAH-C

SELF-CONTAINED CUBELET WITH BUILT-IN STORAGE

F-330BAH-C
1/08
Item # 13218

CUBELET DIMENSIONS
W x D x H

F-330BAH-C	24 x 26 x 39*

*with 6" legs

F-330BAH-C
Air-Cooled
Shown

- Up to 320 lbs. of ice production per 24 hours
- Up to 80 lbs. built-in storage
- Corrosion resistant stainless steel
- Automatic flush system designed for longer life and dependability of ice machine
- Evaporator assembly protected from peak loads
- Convenient drop down door
- Front access for easier maintenance
- Removable air filter
- Front in, front out airflow - allows for easier fit into tight spaces with no clearance needed on sides and rear
- R-404 Refrigerant
- Protected by *HoshiGuard* Antimicrobial Agent HOSHIGUARD

NSF c UL US LISTED ISO HOSHIZAKI • ISO 9001

Warranty

Valid in United States, Canada, Puerto Rico, & U.S. Territories. Contact factory for warranty in other countries.

Two Year - Parts & Labor on entire unit.

Five Year - Parts on: Compressor, air-cooled condenser coil.

© HOSHIZAKI AMERICA, INC.

618 Hwy. 74 S., Peachtree City, GA 30269 | TEL 1-800-438-6087 | FAX 1-800-345-1325 | www.hoshizaki.com

F-330BAH-C
SELF-CONTAINED CUBELET WITH BUILT-IN STORAGE BIN

DIMENSIONS
W x D x H

F-330BAH-C
24 x 26 x 39*
*with 6" legs

- Air-cooled

AIR-COOLED

Water Temp° F.		50°	70°	90°
Air Temp° F.	70°	320	300	290
	80°	275	265	250
	90°	240	230	220

UTILITY CONSUMPTION

Model Number	KWH per 100 LBS. 90/70	KWH per 100 LBS. 70/50	Potable Water Gal. per 100 lbs.
F-330BAH-C	6.7	4.5	12.0

SPECIFICATIONS

Model Number	Condenser	Amperage	Min. Circuit Ampacity	Shipping Weight
F-330BAH-C	Air-Cooled	7.4	N/A	178 lbs.

STORAGE BINS

Model Number	Application Capacity
F-330BAH-C	Built-in 80 lb. capacity

- Circuit breaker or fuse protects gear motor from overload.
- Gear motor runs one minute after termination of ice making to clear all ice form evaporator.

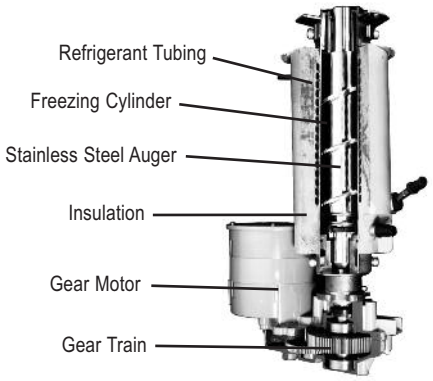

EVAPORATOR

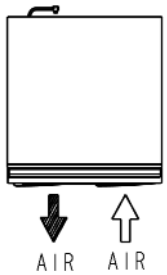

TOP VIEW

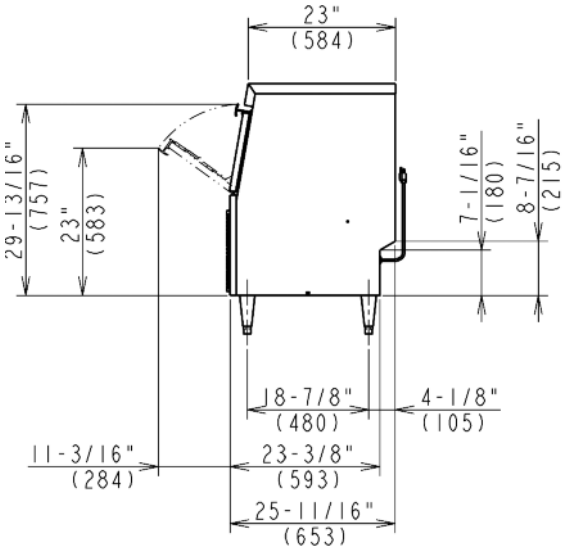

SIDE VIEW

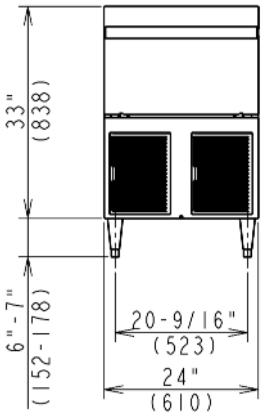

FRONT VIEW

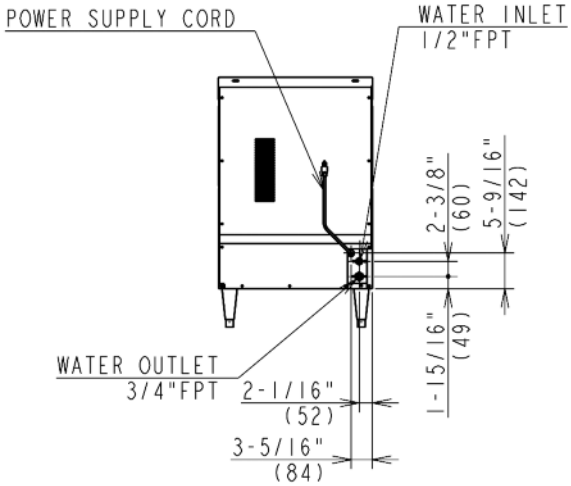

REAR VIEW

ELECTRICAL & PLUMBING/F-330BAH-C

- 115V/60/1
- 1/2" OD copper or equivalent independent potable water supply
- 3/4" FPT independent drain connection

OPERATING LIMITS

• Ambient Temp Range	45 - 100°F
• Water Temp Range	45 - 90°F
• Water Pressure	10 - 113psig
• Voltage Range	104 - 127V

SERVICE

- Panels easily removed and all components accessible for service.
- Removable/cleanable air filters

© HOSHIZAKI AMERICA, INC.

618 Hwy. 74 S., Peachtree City, GA 30269 | TEL 1-800-438-6087 | FAX 1-800-345-1325 | www.hoshizaki.com | Printed in U.S.A.