Hoshizaki reserves the right to change specifications without notice.

Item # _____

Project: _____

Qty: _____

*AutoCad available on KCL

F-450MAH(C)

MODULAR FLAKER/CUBELET ICE MACHINE

SLIM-LINE SERIES

F-450MAH(C)
9/06
Item # 13133

FLAKER/CUBELET DIMENSIONS
W x D x H

F-450MAH(C)
22 x 27 3/8 x 21 7/8

B-300

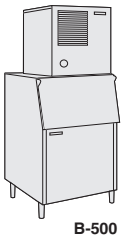
B-500

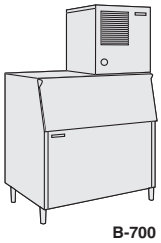
B-700

B-800

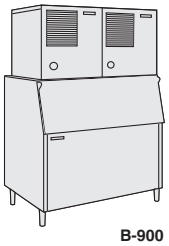
B-900

Also available on Large Bins:
B-1150SS
B-1300SS
B-1500SS
B-1650SS

F-450MAH
Air-Cooled
Shown on an optional
B-300

F-450MAH-C
Air-Cooled

F-450MAH

- Up to 476 lbs. of ice production per 24 hours

F-450MAH-C

- Up to 426 lbs. of ice production per 24 hours

F-450MAH & F-450MAH-C

- Durable stainless steel exterior
- CleanCycle12® Design
- 15 minute flush cycle every 12 hours
- Removes sediment
- Cleaner ice
- Longer life and easy maintenance
- Removable air filters (Air-cooled model only)
- R-404A refrigerant

Warranty

Valid in United States, Canada, Puerto Rico, & U.S. Territories. Contact factory for warranty in other countries.

Two Year - Parts & Labor on entire machine.
Five Year - Parts on Compressor, air-cooled condenser coil.

© HOSHIZAKI AMERICA, INC.

618 Hwy. 74 S., Peachtree City, GA 30269 | TEL 1-800-438-6087 | FAX 1-800-345-1325 | www.hoshizaki.com

F-450MAH(C) FLAKER/CUBELET ICE MACHINE
SLIM-LINE SERIES

DIMENSIONS
W x D x H
F-450MAH(C)
22 x 27 3/8 x 21 7/8

- Air-cooled - Flaker ice machine
- Air-cooled - Cubelet ice machine

AIR-COOLED / F-450MAH

Water Temp° F.		50°	70°	90°
Air Temp° F.	70°	476	456	435
	80°	416	397	379
	90°	362	355	330

AIR-COOLED / F-450MAH-C

Water Temp° F.		50°	70°	90°
Air Temp° F.	70°	426	407	387
	80°	368	350	333
	90°	317	310	287

UTILITY CONSUMPTION

Model Number	Approximate Electrical 90/70	Approximate Electrical 70/50	KWH per 100 LBS. 90/70	KWH per 100 LBS. 70/50	Potable Water Gal. per 100 lbs.
F-450MAH	915	858	6.2	4.3	12.0
F-450MAH-C	956	880	7.4	5.0	12.0

SPECIFICATIONS

Model Number	Condenser	Amperage	Min. Circuit Ampacity	Shipping Weight
F-450MAH	Air-Cooled	11.0	20	175 lbs.
F-450MAH-C	Air-Cooled	11.0	20	175 lbs.

STORAGE BINS

Model Number	Application Capacity	ARI-Rated Capacity
B-300	300 lbs.	260 lbs.
B-500	500 lbs.	360 lbs.
B-700	700 lbs.	550 lbs.
B-800	800 lbs.	600 lbs.
B-900	900 lbs.	660 lbs.
B-1150	1150 lbs.	N/A
B-1300	1275 lbs.	N/A
B-1500	1490 lbs.	N/A
B-1650	1605 lbs.	N/A

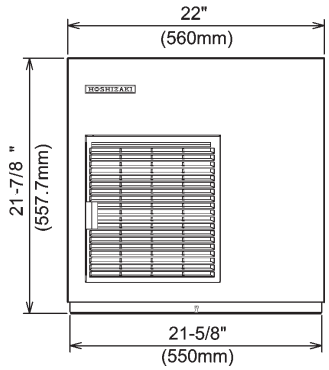

FRONT VIEW

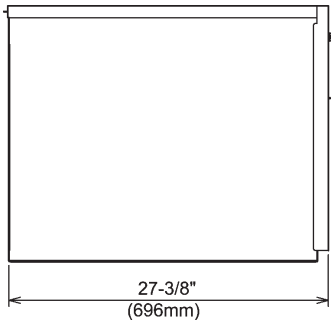

SIDE VIEW

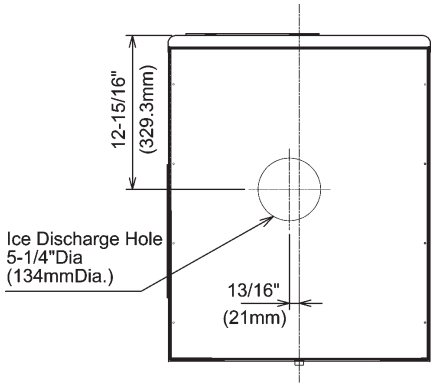

ICE DROP ZONE

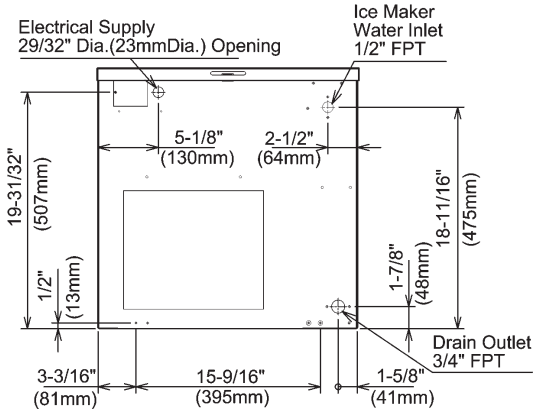

AIR-COOLED UNIT

ELECTRICAL & PLUMBING/F-450MAH(C)

- 115V/60/1
- 20 amp Max Fuse/HACR Breaker Size
- 3/8" OD copper or equivalent independent water supply
- 3/4" FPT independent drain connection

OPERATING LIMITS

• Ambient Temp Range	45 - 100°F
• Water Temp Range	45 - 90°F
• Water Pressure	10 - 113psig
• Voltage Range	104 - 127V

SERVICE

- Panels easily removed and all components accessible for service.
- Removable/cleanable air filter (Air-Cooled model only)

© HOSHIZAKI AMERICA, INC.

618 Hwy. 74 S., Peachtree City, GA 30269 | TEL 1-800-438-6087 | FAX 1-800-345-1325 | www.hoshizaki.com | Printed in U.S.A.