Hoshizaki reserves the right to change specifications without notice.

Item # _____

Project: _____

Qty: _____

*AutoCad available on KCL

KM-1301S_H(3)

STACKABLE ICE CUBER

KM-1301S_H(3)
2/09
Item # 13232

KM-1301S_H(3)
48 x 27 3/8 x 27 3/8

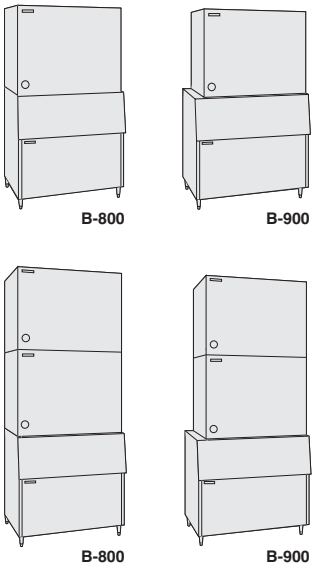

KM-1301SAH
Air-Cooled 1 Phase

KM-1301SAH3
Air-Cooled 3 Phase

KM-1301SWH
Water-Cooled 1 Phase
Shown on an optional
B-900

KM-1301SWH3
Water-Cooled 3 Phase

KM-1301SRH
Remote Air-Cooled 1 Phase

KM-1301SRH3
Remote Air-Cooled 3 Phase

- Up to 1353 lbs. of ice production per 24 hours
- Durable stainless steel exterior
- Protected by *HoshiGuard* Antimicrobial Agent HOSHIGUARD
- CycleSaver® design
- EverCheck® alert system
- Individual crescent cube
- Stainless steel evaporator
- Stackable for 2706 lbs. per 24 hour ice production in the same floor space
- Removable air filters (Air-cooled model only)
- R-404A Refrigerant
- Complies with California Energy Commission guidelines (CEC)

* The KM-1301SAH, KM-1301SAH3, KM-1301SRH and KM-1301SRH3 are ENERGY STAR certified

Also available on Large Bins:
B-1150SS
B-1300SS
B-1500SS
B-1650SS

Warranty

Valid in United States, Canada, Puerto Rico, & U.S. Territories. Contact factory for warranty in other countries.

Three Year - Parts & Labor on entire machine.
Five Year - Parts & Labor on: Evaporator.
Five Year - Parts on: Compressor, air-cooled condenser coil.

© HOSHIZAKI AMERICA, INC.

618 Hwy. 74 S., Peachtree City, GA 30269 | TEL 1-800-438-6087 | FAX 1-800-345-1325 | www.hoshizaki.com

KM-1301S_H(3)
STACKABLE ICE CUBER

DIMENSIONS
W x D x H
KM-1301S_H(3)
48 x 27 3/8 x 27 3/8

STACKABLE ICE CUBER

- Air-cooled 1 phase / Air-cooled 3 phase
- Water-cooled 1 phase / Water-cooled 3 phase
- Remote Air-cooled 1 phase / Remote Air-cooled 3 phase

AIR - COOLED 1 PHASE / AIR - COOLED 3 PHASE

Water Temp˚ F.		50˚	70˚	90˚
Air Temp˚ F.	70˚	1329 / 1298	1281 / 1257	1188 / 1162
	80˚	1292 / 1267	1217 / 1204	1109 / 1086
	90˚	1281 / 1257	1164 / 1159	1060 / 1049

WATER - COOLED 1 PHASE/ 3 PHASE

Water Temp˚ F.		50˚	70˚	90˚
Air Temp˚ F.	70˚	1318 / 1333	1319 / 1323	1249 / 1246
	80˚	1319 / 1326	1321 / 1311	1211 / 1198
	90˚	1319 / 1323	1323 / 1300	1228 / 1201

REMOTE AIR - COOLED 1 PHASE/ 3 PHASE

Water Temp˚ F.		50˚	70˚	90˚
Air Temp˚ F.	70˚	1353 / 1339	1315 / 1297	1219 / 1203
	80˚	1324 / 1307	1264 / 1243	1144 / 1127
	90˚	1315 / 1297	1222 / 1197	1110 / 1088

UTILITY CONSUMPTION

Model Number	Ice Production Per Cycle Lbs.	Ice Production Per Cycle Cubes	KWH per 100 LBS.	Potable Water Gal. per 100 lbs.	Condenser Water Gal. per 100 lbs.
KM-1301SAH	29.8	1440	4.5	15.7	N/A
KM-1301SAH3	30.4	1440	4.6	15.6	N/A
KM-1301SWH	31.0	1440	3.2	19.4	118
KM-1301SWH3	32.2	1440	3.4	19.1	119
KM-1301SRH	31.1	1440	4.1	16.6	N/A
KM-1301SRH3	30.7	1440	4.3	16.0	N/A

SPECIFICATIONS

Model Number	Condenser	Amperage	Min. Circuit Ampacity	Shipping Weight
KM-1301SAH	Air-Cooled	12.4	20	315 lbs.
KM-1301SAH3	Air-Cooled	9.5	20	315 lbs.
KM-1301SWH	Water-Cooled	8.2	20	315 lbs.
KM-1301SWH3	Water-Cooled	6.1	20	315 lbs.
KM-1301SRH	Remote Air-Cooled	13.5	20	315 lbs.
KM-1301SRH3	Remote Air-Cooled	10.7	20	315 lbs.

STORAGE BINS

Model Number	Application Capacity	ARI-Rated Capacity
B-800	800 lbs.	600 lbs.
B-900	900 lbs.	660 lbs.
B-1150	1150 lbs.	N/A
B-1300	1275 lbs.	N/A
B-1500	1490 lbs.	N/A
B-1650	1605 lbs.	N/A

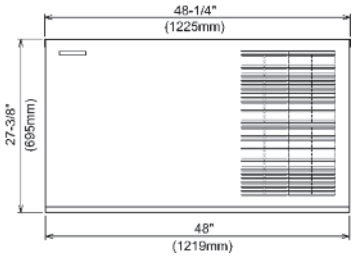

FRONT VIEW

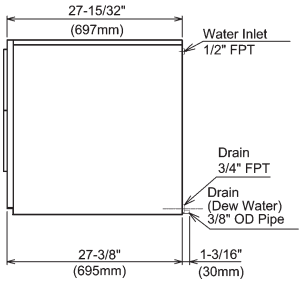

SIDE VIEW

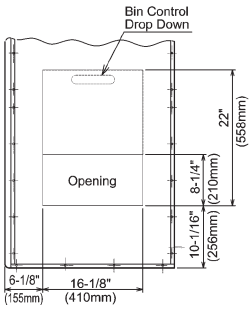

ICE DROP ZONE

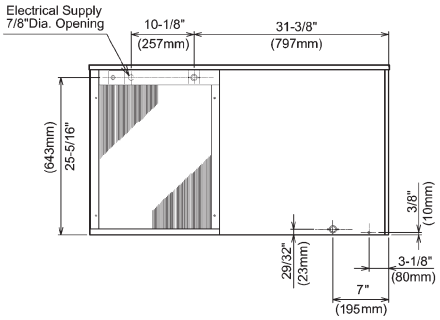

AIR-COOLED UNIT

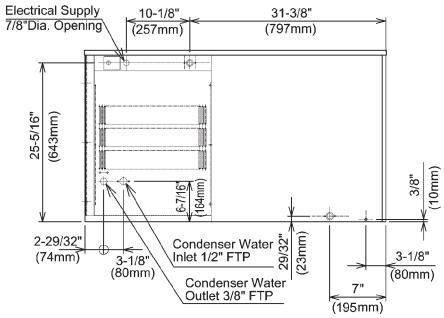

WATER-COOLED UNIT

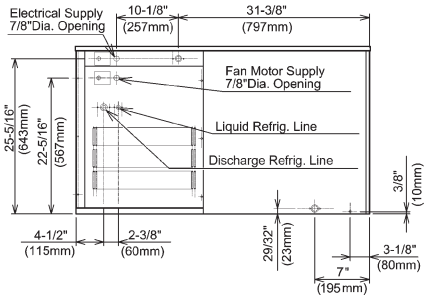

REMOTE AIR-COOLED UNIT

URC-14F Remote Condenser (Sold Separately)
For Use with KM-1301SRH3

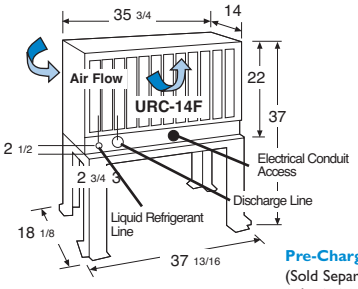

Pre-Charged Tubing Kits
(Sold Separately)
20' R404-2068-2
35' R404-3568-2
55' R404-5568-2

Voltage supply for the URC Remote Condenser is supplied from the Ice Maker. No additional circuit is required.

ELECTRICAL & PLUMBING/KM-1301S_H(3)

KM-1301SAH / SWH / SRH
- 208 - 230V/60/1ø (3 wire with neutral for 115V)
- 20 amp Max Fuse/HACR Breaker Size

KM-1301SAH3 / SWH3 / SRH3
- 208 - 230V/60/3ø
- 20 amp Max Fuse/HACR Breaker Size
- 1/2" OD copper or equivalent independent potable water supply
- 3/4" FPT independent drain connection

OPERATING LIMITS

• Ambient Temp Range	45 - 100˚F
• Water Temp Range	45 - 90˚F
• Water Pressure	10 - 113psig
• Voltage Range	187 - 253V

CONDENSING UNIT

• Voltage Range	104 - 127V
• Ambient Temp Range	-20 - 122˚F

SERVICE

- Panels easily removed and all components accessible for service.
- Removable/cleanable air filters (Air-cooled model only)

© HOSHIZAKI AMERICA, INC.

618 Hwy. 74 S., Peachtree City, GA 30269 | TEL 1-800-438-6087 | FAX 1-800-345-1325 | www.hoshizaki.com | Printed in U.S.A.