Hoshizaki reserves the right to change specifications without notice.

Item # _____

Project: _____

Qty: _____

*AutoCad available on KCL

KM-1340M_H

MODULAR CRESCENT ICE CUBER

KM-1340M_H
1/08
Item # 13175

CUBER DIMENSIONS
W x D x H

KM-1340M_H
30 x 27 3/8 x 41 1/2

CONDENSING UNIT DIMENSIONS
W x D x H

Installation Dimensions URC-14F
37 13/16 x 18 1/8 x 36 15/16*
*with legs

Actual Dimensions URC-14F
35 11/16 x 15 11/16 x 21 15/16

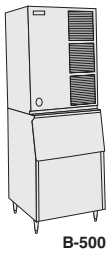
B-500

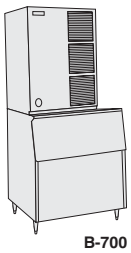
B-700

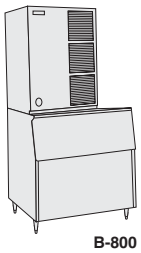
B-800

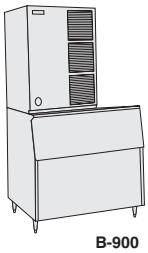
B-900

Also available on Large Bins:
B-1150SS
B-1300SS
B-1500SS
B-1650SS

KM-1340MAH
Air-Cooled
Shown on an optional
B-900

KM-1340MWH
Water-Cooled

KM-1340MRH
Remote Air-Cooled

- Up to 1401 lbs. of ice production per 24 hours
- Durable stainless steel exterior
- Protected by *HoshiGuard* Antimicrobial Agent HOSHIGUARD
- CycleSaver® design CYCLESAVER
- EverCheck® alert system everCheck
- Individual crescent cube
- Stainless steel evaporator
- Removable air filters (Air-cooled model only)
- R-404A Refrigerant
- Complies with California Energy Commission guidelines (CEC)

* The KM-1340MAH and KM-1340MRH are ENERGY STAR certified.

Warranty

Valid in United States, Canada, Puerto Rico, & U.S. Territories. Contact factory for warranty in other countries.

Three Year - Parts & Labor on entire machine.
Five Year - Parts & Labor on: Evaporator.
Five Year - Parts on: Compressor, air-cooled condenser coil.

© HOSHIZAKI AMERICA, INC.

618 Hwy. 74 S., Peachtree City, GA 30269 | TEL 1-800-438-6087 | FAX 1-800-345-1325 | www.hoshizaki.com

KM-1340M_H
MODULAR CRESCENT ICE CUBER

DIMENSIONS
W x D x H

KM-1340M_H
30 x 27 3/8 x 41 1/2

MODULAR ICE CUBER

- Air-cooled
- Water-cooled
- Remote Air-cooled

AIR - COOLED

Water Temp˚ F.		50˚	70˚	90˚
Air Temp˚ F.	70˚	1325	1278	1200
	80˚	1289	1218	1130
	90˚	1278	1167	1081

WATER - COOLED

Water Temp˚ F.		50˚	70˚	90˚
Air Temp˚ F.	70˚	1382	1366	1284
	80˚	1370	1344	1230
	90˚	1366	1327	1224

REMOTE AIR - COOLED

Water Temp˚ F.		50˚	70˚	90˚
Air Temp˚ F.	70˚	1401	1357	1274
	80˚	1367	1299	1204
	90˚	1357	1251	1159

UTILITY CONSUMPTION

Model Number	Ice Production Per Cycle Lbs.	Cubes	KWH per 100 LBS.	Potable Water Gal. per 100 lbs.	Condenser Water Gal. per 100 lbs.
KM-1340MAH	28.1	1440	4.7	18.3	N/A
KM-1340MWH	28.4	1440	3.6	21.0	108
KM-1340MRH	28.7	1440	4.5	18.3	N/A

SPECIFICATIONS

Model Number	Condenser	Amperage	Min. Circuit Ampacity	Shipping Weight
KM-1340MAH	Air-Cooled	9.7	20	315 lbs.
KM-1340MWH	Water-Cooled	9.2	20	293 lbs.
KM-1340MRH	Remote Air-Cooled	9.5	20	289 lbs.

STORAGE BINS

Model Number	Application Capacity	ARI-Rated Capacity
B-500	500 lbs.	360 lbs.
B-700	700 lbs.	550 lbs.
B-800	800 lbs.	600 lbs.
B-900	900 lbs.	660 lbs.
B-1150	1150 lbs.	N/A
B-1300	1275 lbs.	N/A
B-1500	1490 lbs.	N/A
B-1650	1605 lbs.	N/A

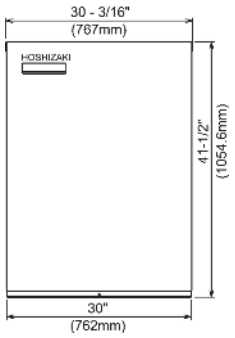

FRONT VIEW

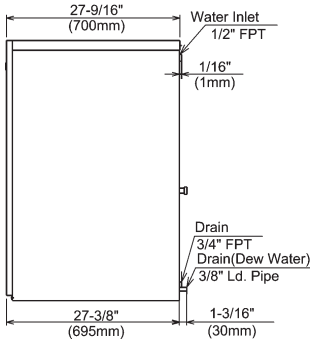

SIDE VIEW

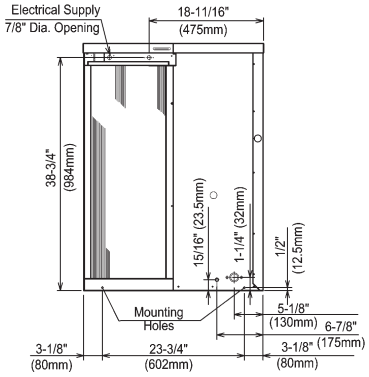

AIR-COOLED UNIT

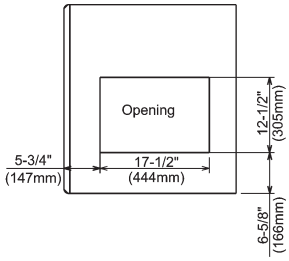

ICE DROP ZONE

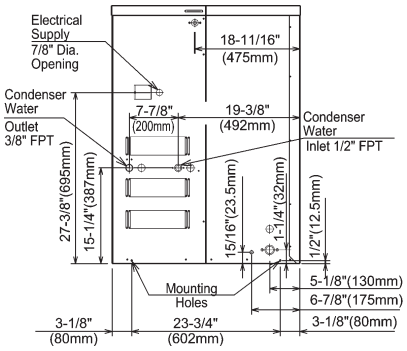

WATER-COOLED UNIT

URC-14F Remote Condenser (Sold Separately)
For Use with KM-1340MRH

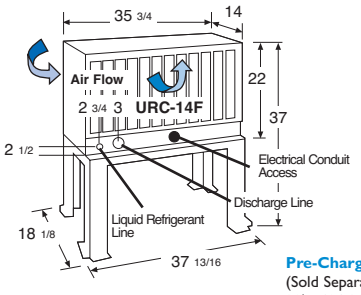

Pre-Charged Tubing Kits
(Sold Separately)
20' R404-2068-2
35' R404-3568-2
55' R404-5568-2

Voltage supply for the URC Remote Condenser is supplied from the Ice Maker. No additional circuit is required.

ELECTRICAL & PLUMBING/KM-1340M_H

- 208 - 230V/60/1 (3 wire with neutral for 115V)
- 20 amp Max Fuse
- 1/2" FPT copper or equivalent independent potable water supply
- 3/4" FPT independent drain connection
- 3/8" OD Tube

OPERATING LIMITS

- Ambient Temp Range 45 - 100˚F
- Water Temp Range 45 - 90˚F
- Water Pressure 10 - 113psig
- Voltage Range 187 - 253V

CONDENSING UNIT

- Voltage Range 104 - 127V
- Ambient Temp Range -20 - 122˚F

SERVICE

- Panels easily removed and all components accessible for service.
- Removable/cleanable air filters (Air-cooled model only)

© HOSHIZAKI AMERICA, INC.

618 Hwy. 74 S., Peachtree City, GA 30269 | TEL 1-800-438-6087 | FAX 1-800-345-1325 | www.hoshizaki.com | Printed in U.S.A.