BUNN®

ITEM#

PROJECT

DATE

Tiger Super Automatic Espresso Machine with Steam Wand

Model Tiger XL S Series
Dimensions: 25.5"H x 15.8"W x 18.1"D
(64.8 cm H x 40.1 cm W x 46 cm D)

Features

BUNN Espress® Tiger XL S Series

Simple solution for exceptional espresso beverages from a sleek, compact super-automatic

- Up to 180 shots per hour from less than 16" of counter space.
- Intelligent modular brewing chamber adjusts espresso for consistent flavor profile.
- Simulates Barista tamping and polishing motion to provide uniform extraction.
- Two hoppers for regular, decaf or other specialty beans.
- Each hopper holds 1.75 lbs of fresh beans.
- Adjusts for 4.5 to 7.4 inch cup clearance.
- Pod brewing feature standard on all models.
- Easy to use control pad and display screen guides user through steps for making drinks.
- Simple daily cleaning process with automatic reminder and lockout.
- Intellisteam™ wand shuts steam off when the milk reaches the preset temperature. No need to monitor temperature with a thermometer.

For current specification sheets and other information, go to *www.bunn.com*.

Related Products

Espresso Water Quality System
EQHP-ESP
Product No. :39000.0008

Replacement Cartridge
EQHP-ESPCRTG
Product No.: 39000.1008

Cafiza™ Cleaning Tablets
Product No.: 36000.1189 (100 count)
Product No.: 36000.1188 (12/case)

Rinza™
Milk Frother Cleaner
Product No.: 39265.0000 (each)
Product No.: 39265.0001 (6/case)

Cup Heater
Product No.: 35800.0400

Model	Agency Listing
Tiger XL S-2	UL, NSF

Dimensions & Specifications

Model	Product #	Volts	Amps	Tank Heater Watts	Total Watts	Capacity	Cubic Measure	Shipping Weight	Cord Attached
Tiger XL S-2	35800.0006	120	16	1700	1850	180 shots/hr	12.5 ft^3	103 lbs	Yes/20A Plug
Tiger XL S-2	35800.0007	208	12	2000	2400	180 shots/hr	12.5 ft^3 *(.35 m^3)*	103 lbs *(46.7 kg)*	Yes/No Plug

Capacity per Hour: Espresso: 180
Cappucino: 120
Latte: 100
POD Products: 60
Hot Water: 7.9 gallons *(30 litres)*
Steam: 1-2 bar continuous operation

Model includes: Machine, water filtration system, installation and 2-year preventative maintenance.

Electrical: Model requires 2-wire grounded service rated 120/208V, single phase, 50/60 Hz.
Plumbing: 30-90 psi (207 - 621 kPa). Machine supplied with $^3/_8$" BSPP fitting. All machines are supplied with a waste water hose and must be connected to a drain.

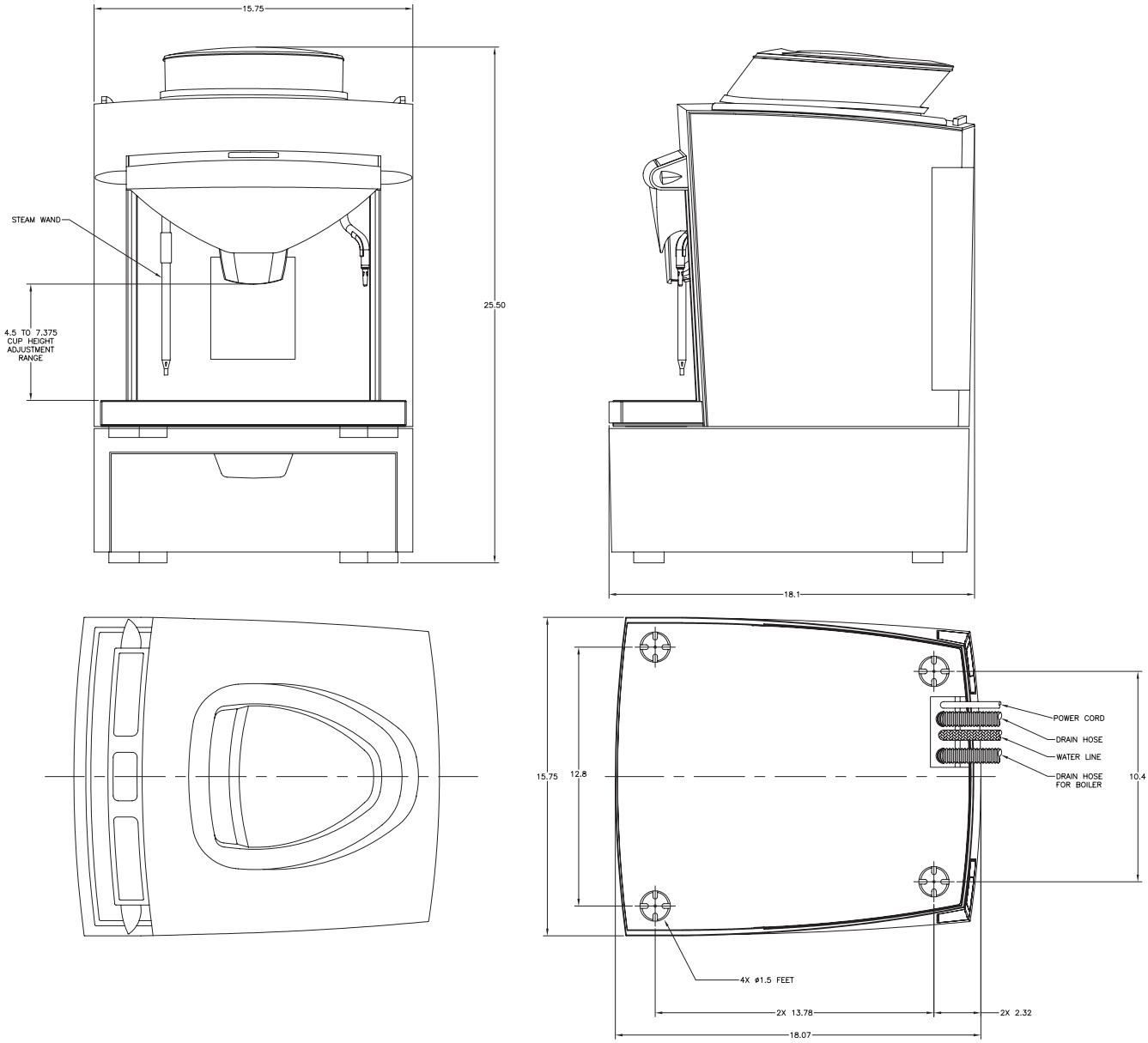

Bunn-O-Matic® Corporation - 1400 Stevenson Drive Springfield, Illinois 62703 • 800-637-8606 • 217-529-6601 • Fax 217-529-6644 • www.bunn.com

BUNN® practices continuous product research and improvement. We reserve the right to change specifications and product design without notice. Such revisions do not entitle the buyer to corresponding changes, improvements, additions or replacements for previously purchased equipment.

All dimensions shown in inches.

8/08 © Bunn-O-Matic Corporation