ULTRA-MAX® MANUAL GAS GRIDDLES

Models 824M, 836M, 848M, 860M & 872M

Features/Benefits:

- ★ Manual control valve for the budget minded operator and for the experienced chef that prefers the feel of a manual control.
- ★ Available in 24, 36, 48, 60 and 72 inch widths to meet your space and volume requirements.
- ★ Ultra-Max high capacity 24” deep cooking surface is ideal for high volume operations.
- ★ Highly polished 1” thick steel plate for superior heat distribution, fast recovery and energy efficient operation.
- ★ Custom designed 30,000 BTU steel burner every 12” of cooking surface provides superior cooking performance.
- ★ Heavy-duty all-weld body construction with stainless steel front, side panels, bull nose and splash guard.
- ★ Cool to the touch stainless steel bull nose provides a safe and comfortable work zone.
- ★ “Euro-style” design with stylishly curved, ergonomically advanced front panel providing easy access and viewing of controls.
- ★ Standing pilot light for consistent performance.
- ★ Spatula wide 3-1/2” front grease trough and grease chute for easier cleaning.
- ★ Large 6 quart stainless steel grease drawer.
- ★ Extra-heavy 4” adjustable legs to fit your countertop needs.
- ★ Floor model stands available for free standing units. Optional casters available.

Model 848M

Applications:

Ultra-Max manual griddles are the perfect match for the budget minded operators. For breakfast, lunch or dinner, the Ultra-Max manual control griddles out-perform the competition.

Construction:

Ultra-Max griddles feature 1” thick highly polished steel griddle plate with 5” tapered stainless steel splash guard and 3-1/2” wide front access grease trough with 6 quart grease drawer capacity. Models 860M and 872M house two 6 quart grease drawers. Includes a 30,000 BTU aluminized steel burner every 12” of width controlled by manual control valve with standing pilot light, 3/4” N.P.T. male gas connection with convertible pressure regulator, and 4” adjustable legs.

Model 848M
Shown with Optional Floor Stand

Warranty:

Ultra-Max gas griddles are covered by Star’s one year parts and labor warranty.

Star Manufacturing International Inc. - 10 Sunnen Drive - P.O. Box 430129 - St. Louis, MO 63143-3800
Phone: (800) 264-7827 - FAX: (800) 264-6666 - www.star-mfg.com

Star Manufacturing International, Inc.

Ultra-Max® Gas Griddles

ULTRA-MAX® MANUAL GAS GRIDDLES

Models 824M, 836M, 848M, 860M & 872M

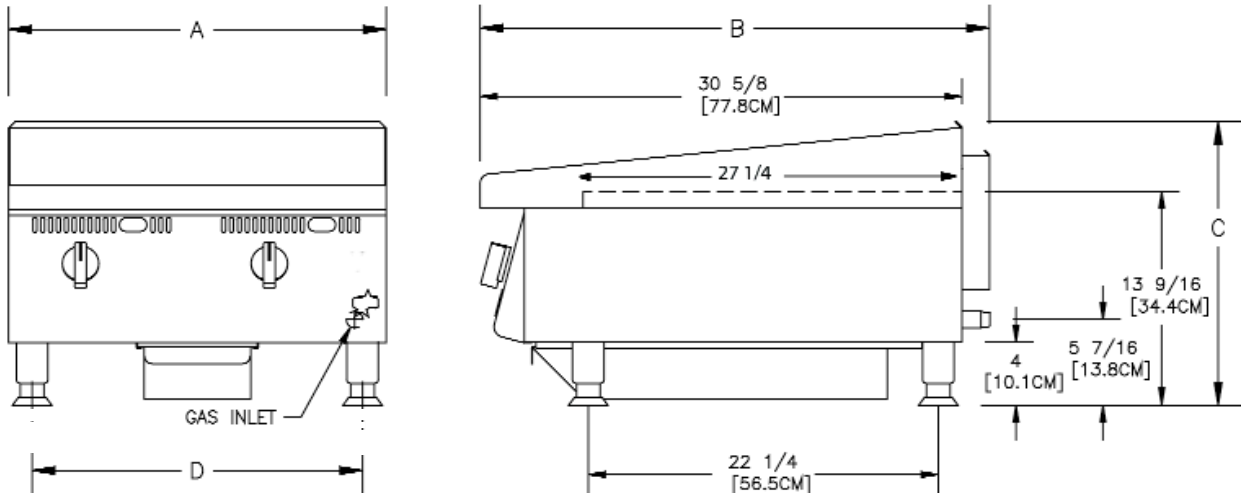

Specifications

Model No.	Dimensions (A) Width Inches	(B) Depth Inches	(C) Height Inches	(D) Leg Width Inches	No. Controls	BTU	Grid Area	Plate Thickness	Approximate Weight Installed	Shipping
824M	24" (61.0 cm)	32-3/8" (82.2 cm)	18" (45.7 cm)	21-1/16" (53.5)	2	60,000	573 sq. in. (3,697sq cm)	1" (2.54 cm)	214 lbs. (97 kg)	286 lbs. (128.7 kg)
836M	36" (91.4 cm)	32-3/8" (82.2 cm)	18" (45.7 cm)	33-1/16" (84)	3	90,000	860 sq. in. (5,545 sq cm)	1" (2.54 cm)	321 lbs. (145.4 kg)	399 lbs. (180 kg)
848M	48" (121.9cm)	32-3/8" (82.2 cm)	18" (45.7 cm)	45-1/16" (114.5)	4	120,000	1146 sq. in. (7,394 sq cm)	1" (2.54 cm)	428 lbs. (193.9 kg)	522 lbs. (234.9 kg)
860M	60" (152.4 cm)	32-3/8" (82.2 cm)	18" (45.7 cm)	57-1/16" (144.9)	5	150,000	1433 sq. in. (9,242 sq cm)	1" (2.54 cm)	535 lbs. (242.4 kg)	635 lbs. (285.8 kg)
872M	72" (182.9 cm)	32-3/8" (82.2 cm)	18" (45.7 cm)	69-1/16" (175.4)	6	180,000	1719 sq. in. (11,091 sq cm)	1" (2.54 cm)	642 lbs. (290.9 kg)	787 lbs. (354.2 kg)

Typical Specifications

Gas griddles are constructed of stainless steel. Valve knobs are protected by a stainless steel bull nose front. Griddle plate is a 1" (2.54 cm) thick highly polished steel plate with 5" (7.6 cm) high tapered wrap-around stainless steel splash guard. Unit has 3-1/2" (8.3 cm) wide front grease trough with grease chute and a 6 qt. (5.68 L) capacity stainless steel grease drawer. Models 860M and 872M house two each 6 quart grease drawers. Units are equipped with a 30,000 BTU aluminized steel burner for every 12" (30.5 cm) of width and is controlled by a manual control valve with a standing pilot light and 3/4" N.P.T. male gas connection with a convertible pressure regulator. Griddles are supplied with 4" (10.2 cm) high stainless steel legs that have a 1-5/8" (4.5 cm) adjustment. Units are approved for installation within 6" (15.2 cm) of combustible surfaces and are UL Gas Fired Listed for U.S./Canada and UL Classified to NSF Standard 4 Sanitation. Printed in the U.S.A.

Due to periodic changes in designs, methods, procedures, policies and regulations, the specifications contained in this sheet are subject to change without notice. While Star Manufacturing exercises good faith efforts to provide information that is accurate, we are not responsible for errors or omissions in information provided or conclusions reached as a result of using the specifications. By using the information provided, the user assumes all risks in connection with such use.

Star Manufacturing International Inc. - 10 Sunnen Drive - P.O. Box 430129 - St. Louis, MO 63143-3800
Phone: (800) 264-7827 - FAX: (800) 264-6666 - www.star-mfg.com