ULTRA-MAX® SNAP ACTION GAS GRIDDLES

Models 824TS, 836TS, 848TS, 860TS & 872TS

Features/Benefits:

- ★ Ultra-Max griddles are designed for high volume, back-kitchen operations.
- ★ Snap-Action thermostat control from 150° to 450°F provides accurate temperature control of +/- 10° of set point.
- ★ Unique internal plate sensor accurately measures the temperature of the griddle plate 3/16" from the cooking surface for instant response to surface temperature change and fast recovery.
- ★ Available in 24, 36, 48, 60 and 72 inch widths to meet your space and volume requirements.
- ★ Highly polished 1" thick steel plate for superior heat distribution, fast recovery and energy efficient operation.
- ★ Custom designed 30,000 BTU steel burner every 12" of cooking surface provides superior cooking performance.
- ★ "Euro-style" design with stylishly curved, ergonomically advanced front panel providing easy access and viewing of controls.
- ★ Safety pilot with auto-shut off for added safety.
- ★ Heavy-duty all-welded body construction with stainless steel front, side panels and splash guard.
- ★ Stainless steel bull nose features cool to the touch technology providing a safe and comfortable work zone.
- ★ Spatula wide 3-1/2" front grease trough and grease chute for easier cleaning.
- ★ Large 6 quart stainless steel grease drawer (two on 60" & 72" models).
- ★ Extra-heavy 4" adjustable legs to fit your countertop needs.
- ★ Floor model stands available for free standing unit. Optional casters available.

Model 848TS

Model 836TS
Shown with Optional Floor Stand

Applications:

Ultra-Max Snap Action griddles are designed for high volume food service operations. Snap action control provides precise temperature control for superior performance and consistency.

Construction:

Ultra-Max griddles feature 1" thick highly polished steel griddle plate with 5" tapered stainless steel splash guard and 3-1/2" wide front access grease trough with 6 quart grease drawer capacity. Models 860TS and 872TS house two 6 quart grease drawers. Includes a 30,000 BTU aluminized steel burner every 12" of width controlled by snap-action (120V) control valve, 3/4" N.P.T. male gas connection with convertible pressure regulator, and 4" adjustable legs. These units are approved for installation within 6" of combustible surfaces and supplied with 6' cord with NEMA 5-15 plug.

Warranty:

Ultra-Max gas griddles are covered by Star's one year parts and labor warranty.

GAS-FIRED c UL us LISTED

CLASSIFIED UL EPH

QUALITY MANAGEMENT SYSTEM STAR CERTIFICATION ISO 9001:2000

Star Manufacturing International Inc. - 10 Sunnen Drive - P.O. Box 430129 - St. Louis, MO 63143-3800
Phone: (800) 264-7827 - FAX: (800) 264-6666 - www.star-mfg.com

Star Manufacturing International, Inc.

Ultra-Max® Gas Griddles

ULTRA-MAX® SNAP ACTION GAS GRIDDLES

Models 824TS, 836TS, 848TS, 860TS & 872TS

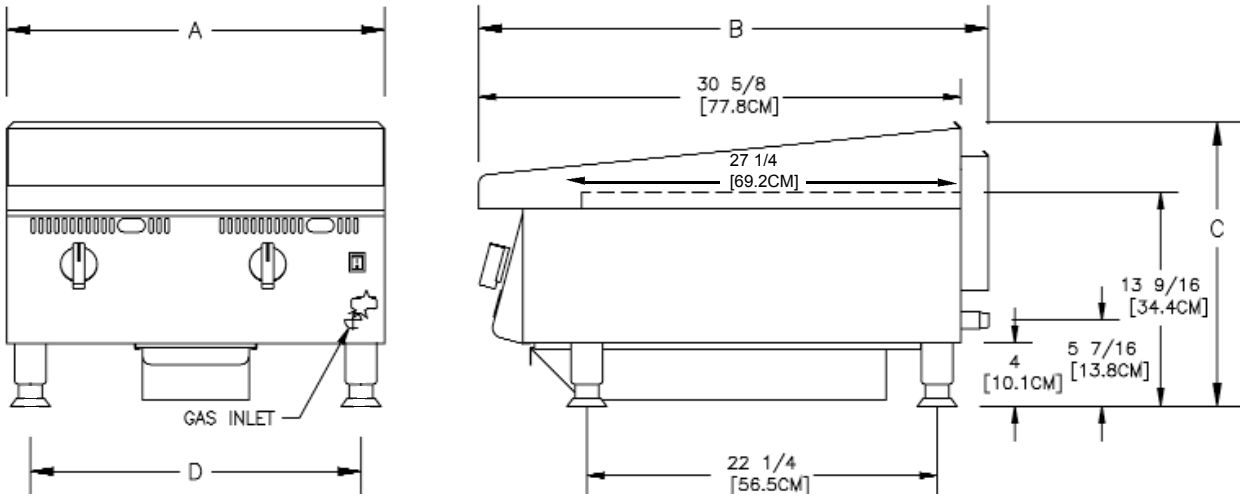

Specifications

Model No.	Dimensions (A) Width Inches	(B) Depth Inches	(C) Height Inches	(D) Leg Width Inches	No. Controls	AMPS	BTU	Grid Area	Plate Thickness	Approximate Weight Installed	Shipping
824TS	24" (61 cm)	32-3/8" (82.2 cm)	18" (45.7 cm)	21" (53.34)	2.5	.5	60,000	573 sq. in. (3,697sq cm)	1" (2.54 cm)	222 lbs. (100.6 kg)	300 lbs. (135 kg)
836TS	36" (91.4 cm)	32-3/8" (82.2 cm)	18" (45.7 cm)	33" (83.8)	3.5	.5	90,000	860 sq. in. (5,545 sq cm	1" (2.54 cm)	333 lbs. (150.9 kg)	435 lbs. (195.8 kg)
848TS	48" (121.9cm)	32-3/8" (82.2 cm)	18" (45.7 cm)	45" (114.3)	4.5	.5	120,000	1146 sq. in. (7,394 sq cm)	1" (2.54 cm)	444 lbs. (201.2 kg)	520 lbs. (234 kg)
860TS	60" (152.4 cm)	32-3/8" (82.2 cm)	18" (45.7 cm)	57" (144.78)	5.5	.5	150,000	1433 sq. in. (9,242 sq cm)	1" (2.54 cm)	555 lbs. (251.5 kg)	656 lbs. (295.2 kg)
872TS	72" (182.9 cm)	32-3/8" (82.2 cm)	18" (45.7 cm)	69" (175.3)	6.5	.5	180,000	1719 sq. in. (11,091 sq cm)	1" (2.54 cm)	666 lbs. (301.8 kg)	785 lbs. (353.2 kg)

Typical Specifications

Gas griddles are constructed of stainless steel, valve knobs are protected by a stainless steel bull nose front. Griddle plate is a 1" (2.54 cm) thick highly polished steel plate with 5" (7.6 cm) high tapered wrap-around stainless steel splash guard. Unit has 3-1/2" (8.3 cm) wide front grease trough with grease chute and a 6 qt. (5.68 L) capacity stainless steel grease drawer. Models 860TS and 872TS house two each 6 quart grease drawers. Units are equipped with a 30,000 BTU aluminized steel burner for every 12" (30.5 cm) of width and are controlled by a snap action control valve (110V) with an automatic safety pilot and 3/4" N.P.T. male gas connection with a convertible pressure regulator. Griddles are supplied with 4" (10.2 cm) high stainless steel legs that have a 1-5/8" (4.5 cm) adjustment. Supplied with 6' cord and NEMA 5-15 plug. Units are approved for installation within 6" (15.2 cm) of combustible surfaces and are UL Gas Fire listed for U.S. & Canada and UL Classified to NSF Standard 4 Sanitation. Printed in the U.S.A.

Due to periodic changes in designs, methods, procedures, policies and regulations, the specifications contained in this sheet are subject to change without notice. While Star Manufacturing exercises good faith efforts to provide information that is accurate, we are not responsible for errors or omissions in information provided or conclusions reached as a result of using the specifications. By using the information provided, the user assumes all risks in connection with such use.

Star Manufacturing International Inc. - 10 Sunnen Drive - P.O. Box 430129 - St. Louis, MO 63143-3800
Phone: (800) 264-7827 - FAX: (800) 264-6666 - www.star-mfg.com