ULTRA-MAX® ELECTRIC GRIDDLES

Models 724T, 736T, 748T, 760T & 772T

Features/Benefits:

- ★ Ultra-Max griddles are designed for the highest volume food service operations and provide maximum performance and reliability.
- ★ Snap Action Thermostatic control adjusts from 150° to 450°F and provides accurate temperature control. Internal plate sensor accurately measures the temperature of the griddle plate 3/16" from the cooking surface for instant response to surface temperature change and fast recovery.
- ★ Available in 24, 36, 48, 60 and 72 inch widths to meet your space and volume requirements.
- ★ Highly polished 1" thick steel plate for superior heat distribution, fast recovery and energy efficient operation.
- ★ Custom designed 4350 watt element every 12" of cooking surface provides superior cooking performance.
- ★ Heavy-duty all-weld body construction with stainless steel front, side panels, bull nose and splash guard.
- ★ "Euro-style" design with stylishly curved, ergonomically advanced front panel providing easy access and viewing of controls.
- ★ Spatula wide 3-1/2" front grease trough and grease chute for easier cleaning.
- ★ Large 6 quart stainless steel grease drawer.
- ★ Extra-heavy-duty 4" adjustable legs to fit your countertop needs.
- ★ Floor model stands available for free standing unit. Optional casters available.

Model 748T

Model 736T
Shown with Optional Floor Stand

Applications:

For breakfast, lunch or dinner, the Ultra-Max electric snap action griddles provide flexibility for a variety of menu items. Perfect for high volume operations.

Construction:

Ultra-Max griddles feature 1" thick highly polished steel griddle plate, 5" tapered stainless steel splash guard, 3-1/2" wide front access stainless steel grease trough, stainless steel 6 quart capacity grease drawer, and stainless steel front panels, side panels, and bull nose. Models 760T and 772T house two 6 quart grease drawers. Includes a 4350 watt element every 12" of width controlled by snap action electric thermostat. Griddles are equipped with a junction box at the rear for making electrical connections. Models 760T and 772T are equipped with 2 junction boxes. Heavy-duty 4'' legs are included.

Warranty:

Ultra-Max electric griddles are covered by Star's one year parts and labor warranty.

Star Manufacturing International Inc. - 10 Sunnen Drive - P.O. Box 430129 - St. Louis, MO 63143-3800
Phone: (800) 264-7827 - FAX: (800) 264-6666 - www.star-mfg.com

ULTRA-MAX® ELECTRIC GRIDDLES

Models 724T, 736T, 748T, 760T & 772T

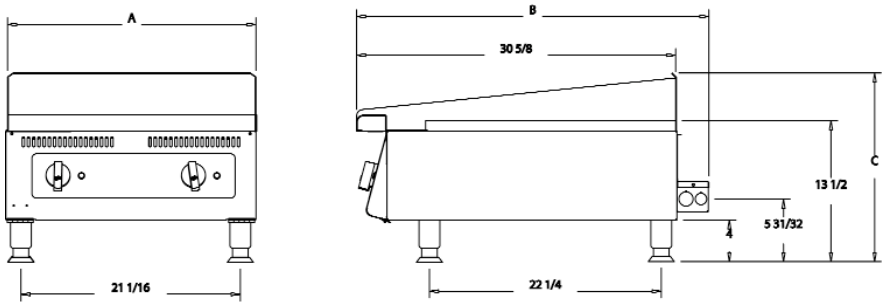

Specifications

Model No.	Dimensions (A) Width Inches	(B) Depth Inches	(C) Height Inches	No. Controls	Watts	Grid Area	Plate Thickness	Approximate Weight Installed	Shipping
724T	24" (61 cm)	33-11/16" (85.5 cm)	18" (45.7 cm)	2	8,700	573 sq. in. (3,697sq cm)	1" (2.54 cm)	220 lbs. (99.7 kg)	290 lbs. (130.5kg)
736T	36" (91.4 cm)	33-11/16" (85.5 cm)	18" (45.7 cm)	3	13,050	860 sq. in. (5,545 sq cm)	1" (2.54 cm)	330 lbs. (149.5 kg)	389 lbs. (175.1 kg)
748T	48" (121.9cm)	33-11/16" (85.5 cm)	18" (45.7 cm)	4	17,400	1146 sq. in. (7,394 sq cm)	1" (2.54 cm)	440 lbs. (199.4 kg)	520 lbs. (234 kg)
760T	60" (152.4 cm)	33-11/16" (85.5 cm)	18" (45.7 cm)	5	21,750	1433 sq. in. (9,242 sq cm)	1" (2.54 cm)	550 lbs. (249.2 kg)	656 lbs. (295.2 kg)
772T	72" (182.9 cm)	33-11/16" (85.5 cm)	18" (45.7 cm)	6	26,100	1719 sq. in. (11,091 sq cm)	1" (2.54 cm)	660 lbs. (299.0 kg)	780 lbs. (351 kg)

Electrical Data

Model	Total KW.	Voltage	AMPS-1 Phase	KW.-Load Phase X-Y	X-Z	Y-Z	AMPS Per Phase X	Y	Z
724T	8.7	208	41.8	4.35	-	4.35	20.9	36.2	20.9
	8.7	240	36.3	4.35	-	4.35	18.1	31.3	18.1
736T	13.05	208	62.7	4.35	4.35	4.35	36.2	36.2	36.2
	13.05	240	54.4	4.35	4.35	4.35	31.4	31.4	31.4
748T	17.4	208	83.6	8.7	4.35	4.35	55.3	55.3	36.2
	17.4	240	72.5	8.7	4.35	4.35	48	48	31.4
760T**	21.8	208	Dual Supply: 62.7 A. One Circuit &	4.35	4.35	4.35	36.2	36.2	36.2
			41.8 A. Other Circuit	4.35	-	4.35	20.9	36.2	20.9
	21.8	240	Dual Supply: 54.4 A. One Circuit &	4.35	4.35	4.35	31.4	31.4	31.4
			36.3 A. Other Circuit	4.35	-	4.35	18.1	31.3	18.1
772T**	26.1	208	Dual Supply 62.7 EA. Circuit	4.35 ea.	4.35ea.	4.35 ea.	36.2 ea.	36.2 ea.	36.2 ea.
	26.1	240	Dual Supply 54.4 EA. Circuit	4.35 ea.	4.35ea.	4.35 ea.	31.4 ea.	31.4 ea.	31.4 ea.

****INDICATES DUAL SUPPLY CIRCUITS**

Typical Specifications

Gas griddles are constructed of stainless steel. Control knobs are protected by a stainless steel bull nose front. Griddle plate is a 1" (2.54 cm) thick highly polished steel plate with 5" (12.7 cm) high tapered wrap-around stainless steel splash guard. Unit has 3-1/2" (8.3 cm) wide front grease trough with grease chute and a 6 qt. (5.68 L) capacity stainless steel grease drawer. Models 760T and 772T house two each 6 quart (5.68 L) grease drawers. Units are equipped with a 4350 watt incoloy sheath element every 12" (330.48 cm) of griddle width and are controlled by a snap action thermostat. A terminal block is provided for making electrical connections. Models 760T and 772T are equipped with two electric connection boxes. Griddles are supplied with 4" (10.2 cm) high stainless steel legs that have a 1-5/8" (1.5 cm) adjustment. Units are approved for installation within 1" (2.54 cm) of side and rear wall combustible surfaces and are cULus Classified and UL classified to NSF Standard 4 Sanitation. Printed in the U.S.A.

Due to periodic changes in designs, methods, procedures, policies and regulations, the specifications contained in this sheet are subject to change without notice. While Star Manufacturing exercises good faith efforts to provide information that is accurate, we are not responsible for errors or omissions in information provided or conclusions reached as a result of using the specifications. By using the information provided, the user assumes all risks in connection with such use.

Star Manufacturing International Inc. - 10 Sunnen Drive - P.O. Box 430129 - St. Louis, MO 63143-3800

Phone: (800) 264-7827 - FAX: (800) 264-6666 - www.star-mfg.com