Star Manufacturing International, Inc.

Ultra-Max® Lava Rock Gas Char-Broilers

ULTRA-MAX® LAVA ROCK GAS CHAR-BROILERS

Models 8024CB, 8036CB, 8048CB, 8060CB & 8072CB

Features/Benefits:

★ Heavy-Duty Ultra-Max lava rock gas char-broilers are designed for high volume foodservice applications that demand maximum performance.

★ Natural lava rock briquettes provide superior heat distribution and vaporize drippings.

★ 30% more cooking space with our high capacity design to meet all your back-of-the-house broiling needs.

★ Available in 24”, 36”, 48”, 60” and 72” widths to fit any foodservice operation’s space requirements.

★ High performance 20,000 BTU’s every 6” of width provides superior heat distribution with more sectional control to cook faster and sear in flavor .

★ Cool to the touch stainless steel bull nose front provides knob protection and comfortable work zone.

★ Heavy-Duty cast iron grates can be individually positioned (flat or slanted) to accommodate a variety of broiling needs. Plus, our grates are reversible with a thin side for searing and a thick side for more delicate menu items.

★ Large capacity stainless steel water pan for easy clean up.

★ Stainless steel 5” high tapered splash guard maintains cleanliness.

★ Gas convertible in the field with conversion kit supplied with each char-broiler. Units are shipped Natural Gas.

★ Heavy-duty 4” adjustable legs to match the height of other Ultra-Max equipment in your line.

★ Floor models available with custom equipment stands.

★ Optional items include 7” extended plate shelf and round steel grates.

Model 8036CB

Applications:

Ultra-Max lava rock char-broilers are designed for high volume and reliability. Whether it’s steak, chicken, hamburger, shish kabobs or other menu items; Star’s heavy-duty Ultra-Max char-broilers will fulfill your back-of-the-house cooking requirements and more!

Quality Construction:

Ultra-Max line of lava rock char-broilers feature welded steel frame construction with stainless steel side panels, front panel, bull nose, drip pan, splash guard, and grease trough. Char-broilers have heavy-duty full polycarbonate graphic panel. Burners every 6” with adjustable valves and standing pilot. Cooking surface consists of heavy duty, cast iron grates adjustable to flat or slanted positions. Heavy-duty legs are 4” high.

Model 8036CB
Shown with Optional Floor Stand

Warranty:

Ultra-Max lava rock gas char-broilers are covered by a one year parts and labor warranty.

GAS-FIRED c UL us LISTED

CLASSIFIED UL EPH

QUALITY MANAGEMENT SYSTEM STAR CERTIFICATION ISO 9001:2000

Star Manufacturing International Inc. - 10 Sunnen Drive - P.O. Box 430129 - St. Louis, MO 63143-3800
Phone: (800) 264-7827 - FAX: (800) 264-6666 - www.star-mfg.com

Star Manufacturing International, Inc

Ultra-Max® Lava Rock Gas Char-Broilers

ULTRA-MAX® LAVA ROCK GAS CHAR-BROILERS

Models 8024CB, 8036CB, 8048CB, 8060CB & 8072CB

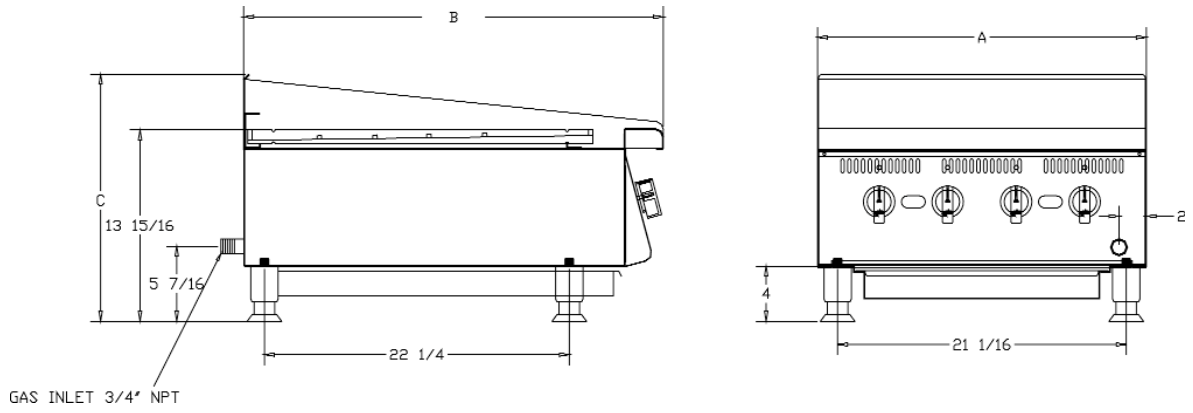

Specifications

Model No.	Dimensions (A) Width Inches (cm)	(B) Depth Inches (cm)	(C) Height Inches (cm)	No. Controls	BTU	Grid Area	Weight Installed lbs (kg)	Shipping lbs (kg)
8024CB	24 (61)	30-5/8 (77.8)	18 (45.7)	4	*80,000	603 sq. in. (3890 sq. cm) 23-7/8" x 25-1/4"	190 (86.3)	260 (118.4)
8036CB	36 (91.4)	30-5/8 (77.8)	18 (45.7)	6	*120,000	906 sq. in. (5845 sq. cm) 35-7/8" x 25-1/4"	265 (120.3)	350 (158.9)
8048CB	48 (121.9)	30-5/8 (77.8)	18 (45.7)	8	*160,000	1209 sq. in. (7800 sq. cm) 47-7/8" x 25-1/4"	348 (157.9)	438 (198.9)
8060CB	60 (152.9)	30-5/8 (77.8)	18 (45.7)	10	*200,000	1512 sq. in. (9754 sq. cm) 59-7/8"x 25-1/4"	428 (194.3)	543 (246.5)
8072CB	72 (182.9)	30-5/8 (77.8)	18 (45.7)	12	*240,000	1815 sq. in. (11,710 sq. cm) 71-7/8" x 25-1/4"	530 (240.6)	665 (301.9)

*Units shipped Natural Gas and conversion kit for field conversion to LP gas.

Typical Specifications

Gas char-broiler is constructed of all stainless steel, front panel and sides. Units have 20,000 BTU natural and propane gas straight tubular stainless steel burner for every 6" (15.24 cm) of width and are controlled by an adjustable control valve and standing pilot. An five pound bag of briquettes is provided for every 12" of width. Cooking surface is heavy duty cast iron grate type and is adjustable from flat to slanted. A stainless steel water pan, bull nose, 5" back splash are standard. Control knobs are protected by a stainless steel bull nose front. Char-broilers are supplied with heavy-duty 4" (10.2 cm) stainless steel high legs that have a 1-5/8" (4.5 cm) adjustment. Gas connection is 3/4" N.P.T. male with a convertible pressure regulator provided. Units are approved for installation in combustible and non-combustible locations and are UL Certified to Classified by UL to NSF Standard 4. UL Gas Fired listed for US/Canada. Printed in the U.S.A.

Due to periodic changes in designs, methods, procedures, policies and regulations, the specifications contained in this sheet are subject to change without notice. While Star Manufacturing exercises good faith efforts to provide information that is accurate, we are not responsible for errors or omissions in information provided or conclusions reached as a result of using the specifications. By using the information provided, the user assumes all risks in connection with such use.

Star Manufacturing International Inc. - 10 Sunnen Drive - P.O. Box 430129 - St. Louis, MO 63143-3800
Phone: (800) 264-7827 - FAX: (800) 264-6666 - www.star-mfg.com