# STAR-MAX® CHEESEMELTERS

## Models 518CMA and 526CMA

### Features/Benefits:

- ★ Star-Max® Cheesemelters are perfect for melting, warming, finishing and reheating a variety of menu items.
- ★ Forced Convection keeps the Cheesemelters cool to the touch and extends life of critical components. The forced convection increases productivity by circulating, pre-heated air into the oven chamber.
- ★ Quartz Infrared Elements, provide faster more consistent heating compared to traditional metal heating elements (2 above product shelf).
- ★ Five pull out shelf positions allow height adjustment for finishing entrees.
- ★ Energy efficient operation with power saver feature reduces electricity consumption by 75%.
- ★ Cheesemelter has a 15 minute timer to help you produce the perfect finish to your entree.

**Model 518CMA**

### Applications:

Star-Max Cheesemelters are designed and engineered for the high volume food service operation keeping value and efficiency in mind. These units are ideal for melting, warming, finishing and reheating a variety of menu items.

### Construction:

Stainless steel construction for long lasting durability. High performance Quartz Infrared Heaters for superior heating performance and reliability. Furnished with 6' cord, standard NEMA 5-15 plug (5-20 on 526CMA for Canada) and 2-1/2" adjustable legs.

### Warranty:

Cheesemelters are covered by Star's one year parts and labor warranty.

**Star Manufacturing International Inc. -** 10 Sunnen Drive - P.O. Box 430129 - St. Louis, MO 63143-3800
Phone: (800) 264-7827 - FAX: (800) 264-6666 - www.star-mfg.com

Star Manufacturing International, Inc.

Star-Max Cheesemelters

# STAR-MAX CHEESEMELTERS

## Models 518CMA and 526CMA

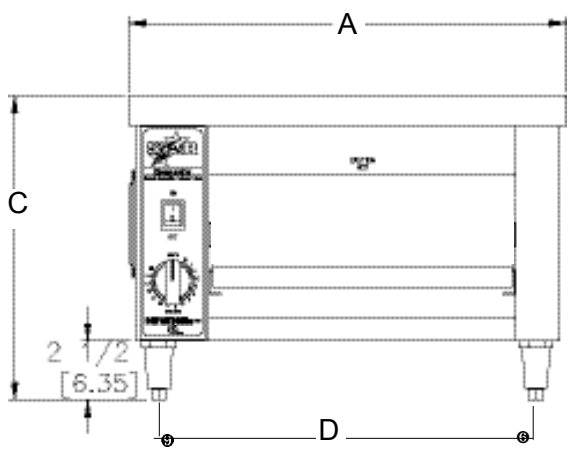


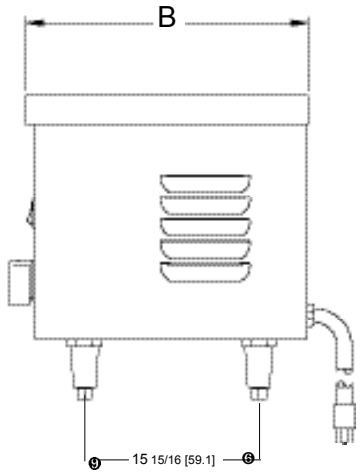


### Performance Data

| Model No. | Production Capacities | Product Opening Width | Product Opening Depth | Product Opening Height |
|---|---|---|---|---|
| 518CMA* | 1 10” plate or 12” platter | 13” (33cm) | 10-1/2” (26.6cm) | 6-1/8” (15.6cm) |
| 526CMA* | 2 10” plates | 20-1/4” (51.5cm) | 10-1/2” (26.6cm) | 6-1/8”(15.6cm) |

### Specifications

| Model No. | Dimensions (A) Width Inches (cm) | (B) Depth Inches (cm) | (C) Height Inches (cm) | (D) Leg Width Inches (cm) | Shipping Weight lbs. (kg) | Shipping Carton Length Inches (cm) | Depth Inches (cm) | Height Inches (cm) |
|---|---|---|---|---|---|---|---|---|
| 518CMA* | 18-1/2 (47) | 12-7/8 (32.7) | 13 (33) | 15-15/16 (40.5) | 29 (13) | 21-1/2 (54.6) | 14-1/2 (36.8) | 13 (33) |
| 526CMA* | 25-3/4 (65.4) | 12-7/8 (32.7) | 13 (33) | 15-15/16 (40.5) | 37 (17) | 28-1/4 (71.8) | 14-1/2 (36.8) | 13 (33) |

### Electrical Data

| Model No. | Volts | HZ 1 Phase | Amps | Watts | Heating Elements Above Shelf | Heating Elements Below Shelf | NEMA |
|---|---|---|---|---|---|---|---|
| 518CMA* | 120 | 60 | 10.5 | 1200 | 2 | 0 | 5-15P |
| 526CMA* | 120 | 60 | 13.8 | 1600 | 2 | 0 | 5-15P |
| 526CMA-CUL | 120 | 60 | 13.8 | 1600 | 2 | 0 | 5-20P** |

*Wall mount feature available upon request. Please contact factory for details.

**Canadian Requirement

### Typical Specifications

Cheesemelters are constructed of spot welded stainless steel. Standard features include two infrared radiant heaters with fused quartz sheathing above shelf; front control panel with on/off switch, panel indicator light and 15 minute timer. Finishing ovens come complete with 2-1/2” adjustable legs and a 6’ cord with NEMA 5-15P plug. Units are listed with UL, CSA , UL certified to NSF4. Printed in the U.S.A.

Due to periodic changes in designs, methods, procedures, policies and regulations, the specifications contained in this sheet are subject to change without notice. While Star Manufacturing exercises good faith efforts to provide information that is accurate, we are not responsible for errors or omissions in information provided or conclusions reached as a result of using the specifications. By using the information provided, the user assumes all risks in connection with such use.

**Star Manufacturing International Inc. -** 10 Sunnen Drive - P.O. Box 430129 - St. Louis, MO 63143-3800

Phone: (800) 264-7827 - FAX: (800) 264-6666 - www.star-mfg.com