STAR-MAX® EQUIPMENT STANDS

Models ES-SM15, ES-SM15S, ES-SM24, ES-SM24S, ES-SM36, ES-SM36S, ES-SM48 & ES-SM48S

Features/Benefits:

- ★ Stainless steel or galvanized steel equipment stands are designed for Star-Max cooking equipment and provide accurate working height for your equipment.
- ★ Available in 15”, 24”, 36” and 48” widths.
- ★ Heavy-duty galvanized steel pipe legs for strength and durability.
- ★ Stainless steel models have stainless top with galvanized shelf below.
- ★ Top shelves are equipped with 1” lip to prevent equipment from sliding off sides and back.
- ★ Plastic feet with one inch adjustment are standard.
- ★ Optional four piece caster set available to make moving easy.

Models ES-SM36S & ES-SM48S

Applications:

Heavy-duty equipment stands are designed to give many years of trouble free service. When used with Star-Max cooking equipment, they provide accurate cooking height.

Quality Construction:

Stands are constructed of heavy gauge galvanized steel. Legs are 1-5/8” (4.1cm) diameter galvanized steel pipe that add strength and durability.

Warranty:

Equipment stands are covered by Star’s one year parts and labor warranty.

NSF

Star Manufacturing International Inc. - 10 Sunnen Drive - P.O. Box 430129 - St. Louis, MO 63143-3800
Phone: (800) 264-7827 - FAX: (800) 264-6666 - www.star-mfg.com

Star Manufacturing International, Inc.

Equipment Stands

STAR-MAX® EQUIPMENT STANDS

Models ES-SM15, ES-SM15S, ES-SM24, ES-SM24S, ES-SM36, ES-SM36S, ES-SM48 & ES-SM48S

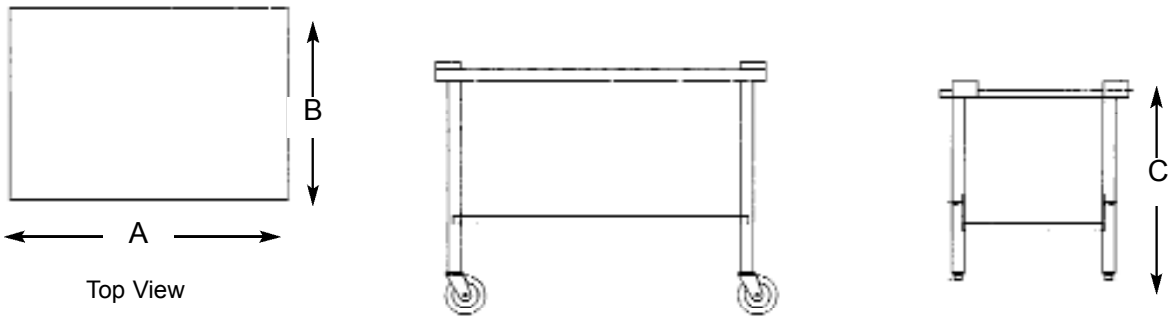

Specifications

Model. No.	Description	Dimensions (A) Width	(B) Depth	(C) Height	Approximate Weight Installed	Shipping
ES-SM15	15" (38.1 cm) All Galvanized Stand	15" (38.1 cm)	24" (61 cm)	24" (61 cm)	25 lbs. (11.3 kg)	30 lbs. (13.6 kg)
ES-SM15S	15" (38.1 cm) Stand with Stainless Steel Top	15" (38.1 cm)	24" (61 cm)	24" (61 cm)	25 lbs. (11.3 kg)	30 lbs. (13.6 kg)
ES-SM24	24" (61 cm) All Galvanized Stand	24" (61 cm)	24" (61 cm)	24" (61 cm)	38 lbs. (17.2 kg)	48 lbs. (21.8 kg)
ES-SM24S	24" (61 cm) Stand with Stainless Steel Top	24" (61 cm)	24" (61 cm)	24" (61 cm)	38 lbs. (17.2 kg)	48 lbs. (21.8 kg)
ES-SM36	36" (91.4 cm) All Galvanized Stand	36" (91.4 cm)	24" (61 cm)	24" (61 cm)	62 lbs. (28.1 kg)	72 lbs. (32.7 kg)
ES-SM36S	36" (91.4 cm) Stand with Stainless Steel Top	36" (91.4 cm)	24" (61 cm)	24" (61 cm)	62 lbs. (28.1 kg)	72 lbs. (32.7 kg)
ES-SM48	48" (121.9 cm) All Galvanized Stand	48"(121.9 cm)	24" (61 cm)	24" (61 cm)	86 lbs. (39 kg)	96 lbs. (43.6 kg)
ES-SM48S	48" (121.9 cm) Stand with Stainless Steel Top	48"(121.9 cm)	24" (61 cm)	24" (61 cm)	86 lbs. (39 kg)	96 lbs. (43.6 kg)
8L-SMCAST	5" (12.7 cm) Diameter Caster Kit				12 lbs. (5.4 kg)	15 lbs. (6.8 kg)

Note: Optional caster kit adds 6" (7.6 cm) to height of stand.

Typical Specifications

Equipment Stands are constructed of heavy gauge galvanized steel with 1-5/8" (4.1 cm) diameter galvanized steel pipe legs for added strength and durability. Plastic feet with an adjustment of 1" (2.5 cm) are standard on stationary stands. The lower shelf on the stand is galvanized steel and the top shelf is available in galvanized or stainless steel, and has tabs to prevent units from sliding off rear or side of stand. Equipment stands are listed by National Sanitation Foundation. Printed in the U.S.A.

Due to periodic changes in designs, methods, procedures, policies and regulations, the specifications contained in this sheet are subject to change without notice. While Star Manufacturing exercises good faith efforts to provide information that is accurate, we are not responsible for errors or omissions in information provided or conclusions reached as a result of using the specifications. By using the information provided, the user assumes all risks in connection with such use.

Star Manufacturing International Inc. - 10 Sunnen Drive - P.O. Box 430129 - St. Louis, MO 63143-3800
Phone: (800) 264-7827 - FAX: (800) 264-6666 - www.star-mfg.com