QCSe2 SERIES CONVEYOR TOASTERS WITH ELECTRONIC CONTROLS

Models QCSe2-500, QCSe2-600H & QCSe2-800

QCSe Features/Benefits:

- ★ Holman's easy to use electronic control panel takes the guesswork out of temperature and speed control settings for your bread products. The electronic control is pre-programmed from the factory with 4 channel settings for toast, bagels, English muffins and other. Change products on the go with the touch of a button any time during the operation.
- ★ Single order feature allows darker or lighter for one time product orders without the need to change program settings.
- ★ Super energy efficiencies with programmable feature allowing the operator to set stand by feature automatically from 1/2 hour to 8 hours: This feature will automatically reduce power by as much as 100% (power reduction can be reduced in 10% increments) if toaster is not in use after a preprogrammed set time.
- ★ Customize your settings for your specific product needs with our easy programmable electronic control. Once the control is programmed the setting will automatically default to the last saved setting.
- ★ Large LED display provides for easier reading of settings.
- ★ Holman's forced convection keeps the toaster cool to the touch and extends the life of critical components. The forced convection increases productivity by re-circulating pre-heated air into the toasting chamber.
- ★ Quartz infrared heaters provide faster, more consistent heating than traditional heating elements and responds quickly to the electronic control.
- ★ Productivity -
  - QCSe2-500 produces up to 500 slices per hour.
  - QCSe2-600H with a 3" high opening produces up to 600 slices per hour.
  - QCSe2-800 produces up to 800 slices per hour
- ★ Compact - requires only 14-5/8" of counter space and the forced convection system allows the unit to be placed against a wall. Other toasters have louvers requiring additional counter space.
- ★ Extended conveyor belt for easy loading and large warming area for higher production.
- ★ Heated holding area to keep toast at the perfect temperature.
- ★ 24 hours 7 days a week technical support by Star technicians.

Model QCSe2-500

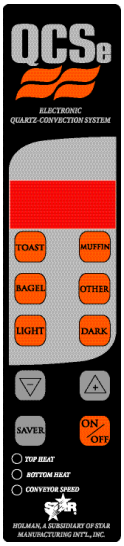

Applications:

Holman's new QCSe2 is the ultimate in conveyor toasters with touch pad electronic controls for consistent toasting and easy operation. This state of the art toaster is designed for a variety of bread products such as bagels, English muffins, toast, buns and more. Electronic controls are perfect for foodservice operations and restaurants with inexperienced staff. Mistakes are minimal with preset channels for consistent toasting. The innovative cost reduction features can provide significant energy savings and longer component life with a simple touch of a button.

Quality Construction:

Stainless steel construction for long lasting durability. Heavy-duty motor, drive chain and conveyor speed control for superior reliability. Conveyor belt tension system for smooth and quiet operation. Toasters are furnished with 1" adjustable legs and 4' cord.

Warranty:

Star's Holman conveyor toasters are covered by a one-year parts and labor warranty.

Star Manufacturing International Inc. - 10 Sunnen Drive - P.O. Box 430129 - St. Louis, MO 63143-3800
Phone: (800) 264-7827 - FAX: (800) 264-6666 - www.star-mfg.com

Star Manufacturing International, Inc.

QCSe2 Conveyor Toasters with Electronic Controls

QCSe2 SERIES CONVEYOR TOASTERS WITH ELECTRONIC CONTROLS

Models QCSe2-500, QCSe2-600H & QCSe2-800

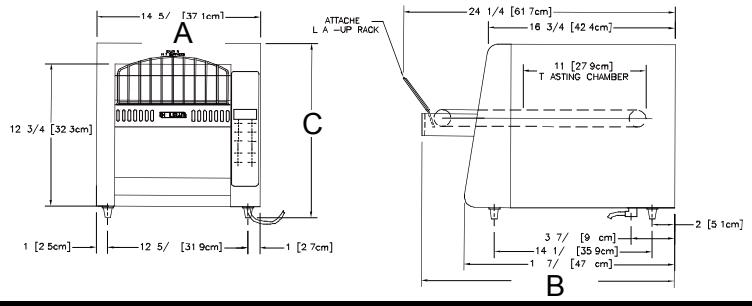

Performance Data

Model No.	Production Capacities	Product Openings
QCSe2-500	up to 500 slices per hour	1-1/2”
QCSe2-600H	up to 600 slices per hour	3”
QCSe2-800	up to 800 slices per hour	1-1/2”

Specifications

	Dimensions			Shipping	Shipping Carton		
	A	B	C				
Model No.	Width Inches (cm)	Depth Inches (cm)	Height Inches (cm)	Weight lbs. (kg)	Width Inches (cm)	Depth Inches (cm)	Height Inches (cm)
QCSe2-500	14-5/8 (37.1)	22-3/8 (56.8)	15-5/8 (39.7)	64 (140.8)	20-1/2 (52.0)	19-1/2 (49.5)	26 (66.0)
QCSe2-600H	14-5/8 (37.1)	22-3/8 (56.8)	15-5/8 (39.7)	64 (140.8)	20-1/2 (52.0)	19-1/2 (49.5)	26 (66.0)
QCSe2-800	14-5/8 (37.1)	22-3/8 (56.8)	15-5/8 (39.7)	64 (140.8)	20-1/2 (52.0)	19-1/2 (49.5)	26 (66.0)

Electrical Data

					Heating Elements [1]		
Model No.	Volts	HZ 1 Phase	Amps	Watts	Above Belt	Below Belt	NEMA
QCSe2-500	120	60	14.3	1700	3	3	5-15P
	120	60	14.3	1700	3	3	5-20P*
QCSe2-600H	208	60	14	2800	2	2	6-20P
	240	60	12.2	2800	2	2	6-20P
QCSe2-800	208	60	14	2800	2	2	6-20P
	240	60	12.2	2800	2	2	6-20P

[1]Can be supplied with metal sheathed heaters (no additional charge), however production will be reduced.

*Canadian Requirements

Typical Specifications

Conveyor toasters are constructed of corrosion resistant stainless steel. Supplied with heavy-duty motor, drive chain and fast heat up quartz infrared heaters. A conveyor belt tension system is supplied for a smooth, quiet operation. Units are supplied with digital programming for variable speed control, top and bottom heat control, power saver and high limit switch. Extended conveyor belt, crumb tray, heated holding area and full width burn guard are standard. Unit has a one-piece cover for easy access with 1" adjustable legs and a 4' cord. Units are listed with UL, CUL and are UL certified to NSF4. Printed in the U.S.A.

Due to periodic changes in designs, methods, procedures, policies and regulations, the specifications contained in this sheet are subject to change without notice. While Star Manufacturing exercises good faith efforts to provide information that is accurate, we are not responsible for errors or omissions in information provided or conclusions reached as a result of using the specifications. By using the information provided, the user assumes all risks in connection with such use.

Star Manufacturing International Inc. - 10 Sunnen Drive - P.O. Box 430129 - St. Louis, MO 63143-3800

Phone: (800) 264-7827 - FAX: (800) 264-6666 - www.star-mfg.com