Star Manufacturing International, Inc.

PRO-MAX® GROOVED TWO-SIDED GRILLS WITH ELECTRONIC TIMERS

Models CG10IT, CG14T, CG14IT, CG14ITGT, CG28IT & CG28ITGT

Pro-Max® Grooved Two-Sided Grill with Electronic Timers

Features/Benefits:

- ★ Expand your menu with Star's Pro-Max grooved two sided grill. Prepare "Panini" sandwiches, chicken breasts, hamburgers, steaks, vegetables and many other menu items quickly and easily while maximizing space.
- ★ Heavy-duty 10", 14" and 28" cast iron or aluminum platens provide long life and superior performance keeping up with your menu requirements.
- ★ Electronic programmable timer from 0 to 9:59 minutes with "LED" display. The timer counts down the cooking time taking the guess work out of preparing food and is equipped with an audible alarm to signal when the timer reaches zero.
- ★ A heavy-duty counter balance hinge system provides safe and effortless operation of the top platen.
- ★ Spacious grilling height accommodates product up to 3" with 3-4 pounds of pressure for proper cooking between platens.
- ★ Top and bottom grill cooks your menu items in half the time, sealing in the flavor.
- ★ The bottom platen has a patented splash guard to help keep products and grease in their place.
- ★ Ergonomically designed control panel provides easy access to controls and grease drawer.
- ★ Heavy gauge, water resistant flexible plastic conduit protects electrical connections.
- ★ On/off 3-position switch :
  - •Top position operates both top and bottom platens.
  - •Bottom position operates bottom platen only.
  - •Middle is the OFF position.
- ★ Thermostat is rated from 175°F (79°C) to 550°F (302°C) and provides accurate sensing of temperature.
- ★ Removable, large capacity grease drawer in the front of unit for easy clean up.

Model CG10IT

Model CG14T

Application:

Star's "Panini" Grills can prepare sandwiches, chicken breasts, hamburgers and a variety of other menu items in your restaurant, cafe, concession stand, bar, or wherever you need high performance cooking. Grills are compact and portable providing flexibility in your operation.

Quality Construction:

Star's Two-Sided "Panini" Grills are constructed of 18 gauge stainless steel. Units available with cast iron or aluminum grooved platens. Star's counter balance hinge mechanism is constructed of hardened aluminum for strength and durability. Metal tubular elements are standard. The lead-in cord is resistant to water and oil and has metallic braiding to protect wiring. Furnished with a 6' cord and standard NEMA plug.

Warranty:

Star's Two-Sided Grills are covered by a one year parts and labor warranty.

Patent No. 6,257,126

Star Manufacturing International Inc. - 10 Sunnen Drive - P.O. Box 430129 - St. Louis, MO 63143-3800
Phone: (800) 264-7827 - FAX: (800) 264-6666 - www.star-mfg.com

Star Manufacturing International, Inc.

Pro-Max® Grooved Two-Sided Grill with Electronic Timers

PRO-MAX GROOVED® TWO-SIDED GRILLS WITH ELECTRONIC TIMERS

Models CG10IT, CG14T, CG14IT, CG14ITGT, CG28IT & CG28ITGT

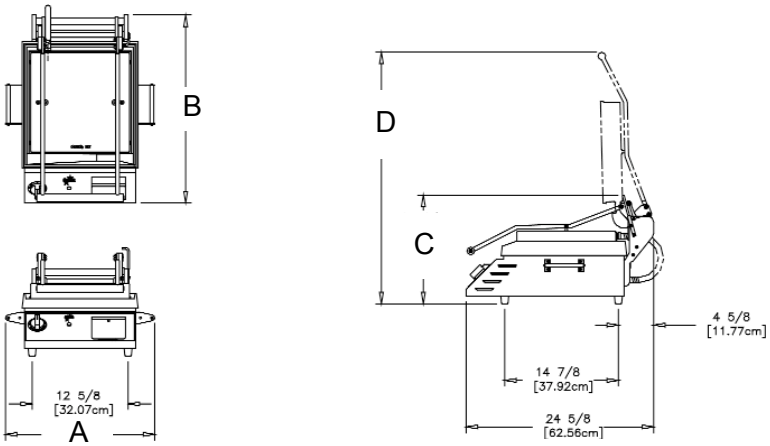

Model and Specifications

Model No.	Grill Surface	(A) Width (cm)	(B) Depth (cm)	Height (C) Closed (cm)	Height (D) Open (cm)	Voltage	Wattage	Amps	NEMA	Approximate Weight Shipping (kg)	Approximate Weight Installed (kg)
CG10IT	Iron	16-1/8” (40.9)	21-1/8” (53.7)	14-1/4” (36.2)	28-3/4” (73)	120 120 208/240	1800 1800 1350/1800	15 15 6.5/7.5	5-15P 5-20P** 6-15P	69 lbs. (31.3)	53 lbs. (24)
CG14T	Alum.	19-5/8” (49.8)	24-5/8” (62.5)	14-1/4” (36.2)	33” (73)	120 120 208/240	1800 1800 1350/1800	15 15 6.5/7.5	5-15P 5-20P** 6-15P	71 lbs. (32.2)	59 lbs. (26.8)
CG14IT	Iron	19-5/8” (49.8)	24-5/8” (62.5)	17-1/4” (43.8)	36” (91.4)	208/240	2700/3600	13/15	6-20P	109 lbs. (49.5)	95 lbs. (43.2)
CG14ITGT*	Iron	19-5/8” (49.8)	24-5/8” (62.5)	17-1/4” (43.81)	36” (91.4)	208/240	2700/3600	13/15	6-20P	105 lbs. (47.7)	91 lbs. (41.4)
CG28IT	Iron	34-1/4” (87)	24-3/4” (62.9)	17-1/4” (43.8)	36” (91.4)	208/240 208/240	5400/7200 5400/7200	26/30 26/30	L6-30P 6-50P**	233 lbs. (105)	208 lbs. (94.5)
CG28ITGT*	Iron	34-1/4” (87)	24-3/4” (62.9)	17-1/4” (43.8)	36” (91.4)	208/240 208/240	5400/7200 5400/7200	26/30 26/30	L6-30P 6-50P**	237 lbs. (105)	202 lbs. (94.5)

* “GT” models have grooved top platen and smooth bottom platen.

NOTE: Units weighing more then 80 pounds have standard 4” legs.

**Canadian Requirements

Typical Specifications

Two-Sided Grills are constructed with an 18 gauge stainless steel body. Cast iron or aluminum grooved platens are standard. A counter balance mechanism provides easy operation of the top platen. Grilling height between platens accommodates up to 3" with counter balance system providing 3-4 pounds of pressure to the cooking product placed on bottom platen. Metal sheathed tubular elements are standard. A standard audible alarm signals when the timer has counted down to zero. Adjustable non-skid feet are standard. Unit is provided with a six foot power cord and Nema rated plug (see specifications above). Units are approved by UL, UL Sanitation to NSF Standard 4 or UL Canada Standards. Printed in the U.S.A.

Due to periodic changes in designs, methods, procedures, policies and regulations, the specifications contained in this sheet are subject to change without notice. While Star Manufacturing exercises good faith efforts to provide information that is accurate, we are not responsible for errors or omissions in information provided or conclusions reached as a result of using the specifications. By using the information provided, the user assumes all risks in connection with such use.

Star Manufacturing International Inc. - 10 Sunnen Drive - P.O. Box 430129 - St. Louis, MO 63143-3800

Phone: (800) 264-7827 - FAX: (800) 264-6666 - www.star-mfg.com