PRO-MAX® DUAL SPLIT TOP (GROOVED & SMOOTH) SPECIALTY TWO-SIDED GRILL

Model GR28SPTI & CG28SPTI

Features/Benefits:

- ★ Expand your menu with Star's Pro-Max dual split top (grooved & smooth) specialty two-sided grill. Prepare burritos, quesadillas, panini sandwiches and many other menu items quickly while maximizing counter space.
- ★ Designed for high volume food service operations, this specialty grill delivers product quickly and consistently.
- ★ Electronic programmable timers with four controls to set different time and temperatures. The timer counts down and is equipped with an audible alarm to signal when the timer reaches zero.
- ★ Heavy-duty cast iron platens provide superior performance and durability.
- ★ Star's exclusive counter balance hinge system provides safe and effortless operation of top platens. Spacious grilling height accommodates product up to three inches thick.
- ★ Easy to read digital thermostat is rated from 250°F (79°C) to 550°F (302°C).
- ★ Front grease trough and drawers for quick, easy cleaning.
- ★ Stainless steel burn guards protect from accidental contact.

Model GR28SPTI

Applications:

Star's dual split top (grooved & smooth) specialty two-sided grill is designed for high volume foodservice operations and can prepare panini sandwiches, burritos, quesadillas and many other menu items quickly and easily. The dual split-top design provides maximum menu flexibility and cooking production.

Quality Construction:

The rugged body is constructed of 18 gauge stainless steel. The grill is supplied with grease trough and stainless steel grease drawer. The counter balance mechanism is constructed from hardened aluminum. The 6 foot lead-in cord has a special covering that is resistant to water and oil and the wires are protected by metallic braiding. Cord comes complete with plug (see typical specifications).

Warranty:

Star's two-sided grill is covered by Star's one year parts and labor warranty.

Star Manufacturing International Inc. - 10 Sunnen Drive - P.O. Box 430129 - St. Louis, MO 63143-3800
Phone: (800) 264-7827 - FAX: (800) 264-6666 - www.star-mfg.com

PRO-MAX® DUAL SPLIT TOP (GROOVED & SMOOTH) SPECIALTY TWO-SIDED GRILL

Model GR28SPTI & CG28SPTI

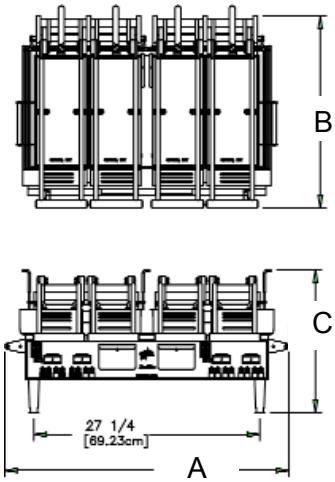

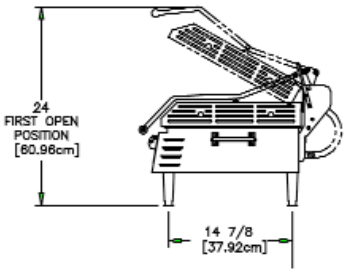

FIRST OPEN POSITION

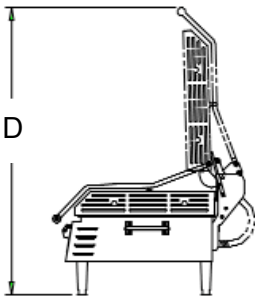

FULL OPEN POSITION

Model and Specifications

Model No.	Grid Surface	(A) Width Inches (cm)	(B) Depth Inches (cm)	(C) Closed Inches (cm)	(D) Open Inches (cm)	Voltage	Wattage	Amps	NEMA Plug	Approximate Weight Shipping lbs. (kg)	Approximate Weight Installed lbs. (kg)
GR28SPTI	Iron	34-1/4 (87)	23-1/8 (58.7)	17-1/4 (43.9)	34-5/8 (87.9)	208/240	3450/4600	16.6 19.2	L6-30P	200 (90.9)	180 (81.8)
CG28SPTI	Iron	34-1/4 (87)	23-1/8 (58.7)	17-1/4 (43.9)	34-5/8 (87.9)	208/240	3450/4600	16.6 19.2	L6-30P	200 (90.9)	180 (81.8)

Typical Specifications

Two-sided grill is constructed with a stainless steel body and cast iron smooth platens. Designed with electric controls for precise temperature control and digital timer for select menu items. A counter balance hinge mechanism provides easy operation of all four top platens. Grilling height between platens is up to 3" with counter balance system providing 3-4 pounds of pressure to the cooking product placed on bottom platen. Metal sheathed tubular elements and adjustable non-skid feet are standard. Unit has six foot power cord with NEMA plug. Units approved with UL, UL Sanitation or UL Canada Standards. Printed in the U.S.A.

Due to periodic changes in designs, methods, procedures, policies and regulations, the specifications contained in this sheet are subject to change without notice. While Star Manufacturing exercises good faith efforts to provide information that is accurate, we are not responsible for errors or omissions in information provided or conclusions reached as a result of using the specifications. By using the information provided, the user assumes all risks in connection with such use.

Star Manufacturing International Inc. - 10 Sunnen Drive - P.O. Box 430129 - St. Louis, MO 63143-3800
Phone: (800) 264-7827 - FAX: (800) 264-6666 - www.star-mfg.com