FAST STEAMERS - TOP LOADING

Models FS1R, FS1D, FS1RT, FS1DT, FS2R, FS2D, FS2RT & FS2DT

Features/Benefits:

- ★ Star's top loading Fast Steamers are small and compact and are designed to meet your high volume needs.
- ★ Two control options available:
  - Manual control provides on-demand steam with a push of a button.
  - Electronic control that takes the guess work out of preparing menu items. Electronic control has four separate channels that can be customized to meet your menu requirements.
- ★ Available in two sizes, 1/2 and 2/3 size pans to meet your volume requirements.
- ★ Heavy-duty hinge mechanism with spring assistance for easy and safe operation.
- ★ Removable aluminum pan and stainless steel wire rack for easy cleaning.
- ★ Available water reservoir (96 oz. capacity) or direct connect water source for all day steaming.
- ★ Heavy-duty handle is positioned to provide safe and easy operation of the lid.

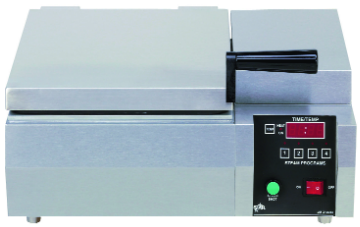

Model FS1DT

Model FS2DT

Applications:

Star's top loading Fast Steamers are perfect for restaurants, coffee shops, kiosks, hotels, casinos, delis, snack shops and a variety of other foodservice operations. Our steamers are ideal for a variety of products from tortillas, pastas, vegetables, seafood and bakery products.

Quality Construction:

Star's top loading Fast Steamers ar constructed of stainless steel exterior and aluminum casting. Heavy-duty metal sheath element is recessed into casting. Heavy-duty hinge mechanism, Silicone seal, wire rack and perforated pan is standard.

Warranty:

Star's top loading Fast Steamers are covered by a one-year parts and labor warranty.

Star Manufacturing International Inc. - 10 Sunnen Drive - P.O. Box 430129 - St. Louis, MO 63143-3800
Phone: (800) 264-7827 - FAX: (800) 264-6666 - www.star-mfg.com

Star Manufacturing International, Inc.

Fast Steamers - Top Loading

FAST STEAMERS - TOP LOADING

Models FS1R, FS1D, FS1RT, FS1DT, FS2R, FS2D, FS2RT & FS2DT

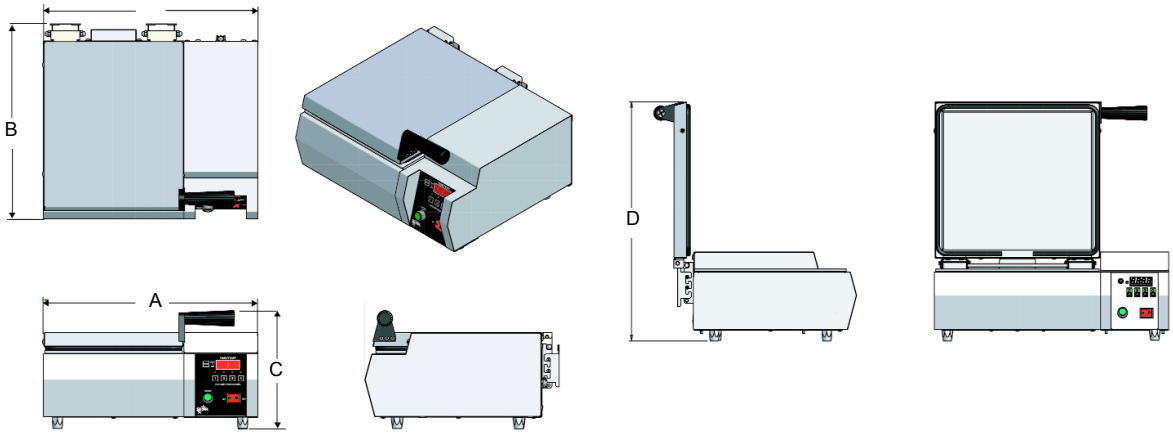

Model Specifications

Model No.	Dimensions (A) Width Inches (cm)	(B) Depth Inches (cm)	(C) Closed Height Inches (cm)	(D) Open Height Inches (cm)	Pan Size	Voltage	Wattage	Amps	NEMA#	Approx. Weight Installed lbs. (kg)	Direct Connect(D), Water Reservoir(R)
FS1R-120V	18.8	17.2	10.5	22.75	1/2	120	1800	15	5-15P	48	R
	(47.8)	(43.7)	(26.7)	(57.8)	1/2	120	1800	15	5-20P*	(21.8)	
FS1D-120V	18.8	17.2	10.5	22.75	1/2	120	1800	15	5-15P	48	D
	(47.8)	(43.7)	(26.7)	(57.8)	1/2	120	1800	15	5-20P*	(21.8)	
FS1RT-120V	18.8	17.2	10.5	22.75	1/2	120	1800	15	5-15P	48	R
	(47.8)	(43.7)	(26.7)	(57.8)	1/2	120	1800	15	5-20P*	(21.8)	
FS1DT-120V	18.8	17.2	10.5	22.75	1/2	120	1800	15	5-15P	48	D
	(47.8)	(43.7)	(26.7)	(57.8)	1 / 2	120	1800	15	5-20P*	(21.8)	
FS2R-120V	22.4	17.2	10.5	22.75	2/3	120	1800	15	5-15P	58	R
	(56.9)	(43.7)	(26.7)	(57.8)	2 / 3	120	1800	15	5-20P*	(26.4)	
FS2D-120V	22.4	17.2	10.5	22.75	2/3	120	1800	15	5-15P	58	D
	(56.9)	(43.7)	(26.7)	(57.8)	2 / 3	120	1800	15	5-20P*	(26.4)	
FS2RT-120V	22.4	17.2	10.5	22.75	2/3	120	1800	15	5-15P	58	R
	(56.9)	(43.7)	(26.7)	(57.8)	2 / 3	120	1800	15	5-20P*	(26.4)	
FS2DT-120V	22.4	17.2	10.5	22.75	2/3	120	1800	15	5-15P	58	D
	(56.9)	(43.7)	(26.7)	(57.8)	2 / 3	120	1800	15	5-20P*	(26.4)	

* Canadian Requirements

Typical Specifications

The top loading steamer's body and cover are constructed of stainless steel. A cast aluminum steam generator with a clamp-on metal sheathed tubular element is standard. The cover has an offset handle and is counter balanced with a spring assist for easy opening and closing. The 2-position hinge stop brackets allow the cover to open to 60° or 90°. The steam zone in which food is held in either a half or two-thirds size special perforated steam pan accommodates 3.5" high food. Electronic controls have (4) independent programmable steam cycles. Direct connect models have a fluid control valve, rear mounted female quick disconnect and water inlet tube assembly with male quick disconnect. Self contained models have a 96 oz. capacity water tank, tank drain, and supply pump. A lighted on-off switch, an easily actuated high cycle steam shot button, solid feet, 6 foot power cord with NEMA rated plug (see specifications above) are standard on all models. Printed in the U.S.A.

Due to periodic changes in designs, methods, procedures, policies and regulations, the specifications contained in this sheet are subject to change without notice. While Star Manufacturing exercises good faith efforts to provide information that is accurate, we are not responsible for errors or omissions in information provided or conclusions reached as a result of using the specifications. By using the information provided, the user assumes all risks in connection with such use.

Star Manufacturing International Inc. - 10 Sunnen Drive - P.O. Box 430129 - St. Louis, MO 63143-3800
Phone: (800) 264-7827 - FAX: (800) 264-6666 - www.star-mfg.com