FAST STEAMERS - FRONT LOADING

Models FSFR, FSFD, FSFRT & FSFDT

Features/Benefits:

- ★ Star's front loading Fast Steamers are small and compact and are designed to meet your high volume needs.
- ★ Front load opening is 14" and tray size is 13.75" x 13.75". Unit includes stainless steel removable wire rack.
- ★ Two control options available:
  - Manual control provides on-demand steam with a push of a button.
  - Electronic control that takes the guess work out of preparing menu items. Electronic control has four separate channels that can be customized to meet your menu requirements.
- ★ Cast aluminum steam generator with cast-in metal sheathed tubular element for instant steam.
- ★ Available water reservoir (96 oz. capacity) or direct connect water source.

Model FSFR

Applications:

Star's front loading Fast Steamers are perfect for restaurants, coffee shops, kiosks, hotels, casinos, delis, snack shops and a variety of other foodservice operations. Star's steamers are ideal for a variety of products from tortillas, pastas, vegetables, seafood and bakery products.

Model FSFR

Quality Construction:

Star's front loading Fast Steamers are constructed of stainless steel exterior and aluminum casting. Heavy-duty metal sheath element is embedded into casting. Wire rack and heavy duty stainless steel tray with plastic handle is standard.

Warranty:

Star front loading Fast Steamers are protected by a one-year parts and labor warranty.

Star Manufacturing International Inc. - 10 Sunnen Drive - P.O. Box 430129 - St. Louis, MO 63143-3800
Phone: (800) 264-7827 - FAX: (800) 264-6666 - www.star-mfg.com

Star Manufacturing International, Inc.

Fast Steamers - Front Loading

FAST STEAMERS - FRONT LOADING

Models FSFR, FSFD, FSFRT & FSFDT

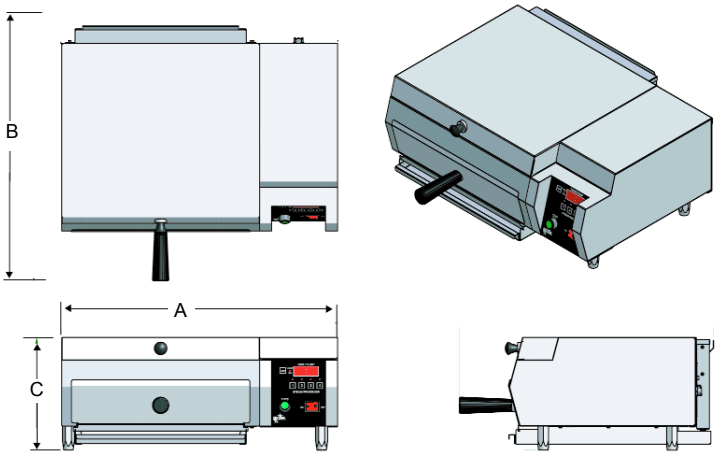

Model Specifications

Model No.	Dimensions (A) Width Inches (cm)	(B) Depth Inches (cm)	(C) Height Inches (cm)	Tray Size (inches) W x D x H	Voltage	Wattage	Amps	NEMA#	Approximate Weight Installed lbs. (kg)	Direct Connect(D), Water Reservoir(R)
FSFR-208V	23 (58.4)	21.5 (54.4)	9.5 (24.1)	13.75" x 13.75" x 3"	208	3300	15.9	6-20P	48 (21.8)	R
FSFR-240V	23 (58.4)	21.5 (54.4)	9.5 (24.1)	13.75" x 13.75" x 3"	240	3600	15	6-20P	48 (21.8)	R
FSFD-208V	23 (58.4)	21.5 (54.4)	9.5 (24.1)	13.75" x 13.75" x 3"	208	3300	15.9	6-20P	48 (21.8)	D
FSFD-240V	23 (58.4)	21.5 (54.4)	9.5 (24.1)	13.75" x 13.75" x 3"	240	3600	15	6-20P	48 (21.8)	D
FSFRT-208V	23 (58.4)	21.5 (54.4)	9.5 (24.1)	13.75" x 13.75" x 3"	208	3300	15.9	6-20P	48 (21.8)	R
FSFRT-240V	23 (58.4)	21.5 (54.4)	9.5 (24.1)	13.75" x 13.75" x 3"	240	3600	15	6-20P	48 (21.8)	R
FSFDT-208V	23 (58.4)	21.5 (54.4)	9.5 (24.1)	13.75" x 13.75" x 3"	208	3300	15.9	6-20P	48 (21.8)	D
FSFDT-240V	23 (58.4)	21.5 (54.4)	9.5 (24.1)	13.75" x 13.75" x 3"	240	3600	15	6-20P	48 (21.8)	D

Typical Specifications

The front loading steamer is constructed with a stainless steel body. A cast aluminum steam generator with cast-in metal sheathed tubular element is standard. Includes a stainless steel tray with a wire rack. Electronic controls have (4) independent programmable steam cycles. Direct connect models have a fluid control valve, rear mounted quick disconnect and water inlet tube assembly. Self contained models have a 96 oz. capacity water tank, tank drain, and supply pump. A lighted on-off switch, an easily actuated high cycle steam shot button, solid feet, 6 foot power cord with NEMA rated plug (see specifications above) are standard on all models. Printed in the U.S.A.

Due to periodic changes in designs, methods, procedures, policies and regulations, the specifications contained in this sheet are subject to change without notice. While Star Manufacturing exercises good faith efforts to provide information that is accurate, we are not responsible for errors or omissions in information provided or conclusions reached as a result of using the specifications. By using the information provided, the user assumes all risks in connection with such use.

Star Manufacturing International Inc. - 10 Sunnen Drive - P.O. Box 430129 - St. Louis, MO 63143-3800
Phone: (800) 264-7827 - FAX: (800) 264-6666 - www.star-mfg.com