HOLMAN® TURBO-MAX™ HIGH SPEED CONVEYOR OVENS

Models HSCO14 & HSCO16

Features/Benefits:

- ★ Dual technology features air impingement combined with toasting elements on top and bottom to provide fast, consistent and superior cooking performance. Bake sandwiches in less than 40 seconds.
- ★ Programmable electronic control provides flexibility and menu options to meet a variety of foodservice operations.
- ★ 14” wide belt and 20” bake chamber provides capacity to handle the highest volume sandwich restaurant with minimal counter space.
- ★ Reversible conveyor belt provides flexibility for a variety of installations.
- ★ Eight menu options plus a conveyor speed range from 15 seconds to 12 minutes takes the guess work out of preparing meals.
- ★ Compact design requires only 40” of counter space.
- ★ Removable conveyor belt, crumb tray and impingement fingers without tools for easy and fast clean-up.
- ★ Stylish appearance with Euro design and attractive graphics.

Model HSCO14

Applications:

From sandwiches to pizza, Holman Turbo-Max conveyor oven is ideal for sandwich shops, restaurants, convenience stores, recreational facilities, pizzarias and a variety of other foodservice operations. Turbo-Max conveyor oven will meet your kitchen needs and surpass your expectations.

Quality Construction:

Holman Turbo-Max conveyor oven’s exterior and interior is constructed of polished stainless steel. Heavy-duty motor with direct drive conveyor system. The stainless conveyor belt is 14’’ wide and easily removable for cleaning. Oven is furnished with 4” adjustable legs. High performance metal sheath heaters are standard for superior and reliable cooking performance. Ovens are supplied with 6’ cord and 15-50 NEMA plug.

Warranty:

Holman Turbo-Max conveyor ovens are covered by a one-year parts and labor warranty.

*Patent pending

CERTIFICATION
ISO 9001:2000

Star Manufacturing International, Inc. - 10 Sunnen Drive - P.O. Box 430129 - St. Louis, MO 63143-3800
Phone: (800) 264-7827 - FAX: (800) 264-6666 - www.star-mfg.com

Star Manufacturing International, Inc.

Holman® Turbo-Max™ Speed Ovens

HOLMAN® TURBO-MAX™ HIGH SPEED CONVEYOR OVENS

ModelS HSCO14 & HSCO16

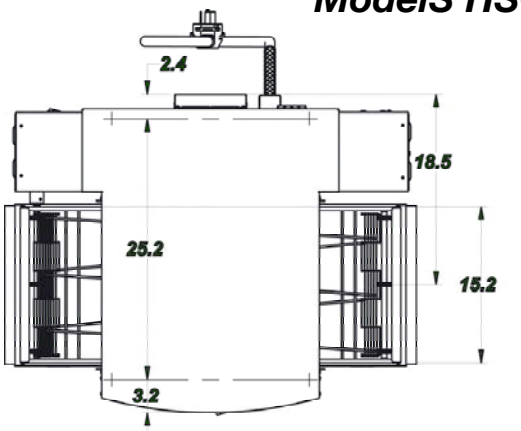

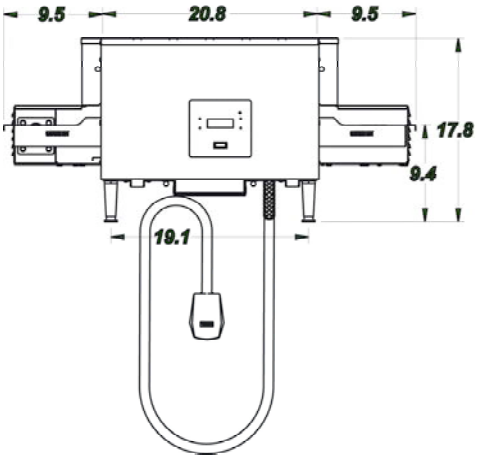

Model and Specifications

Model No.	(A) Width Inches (cm)	(B) Depth Inches (cm)	(C) Height Inches (cm)	Voltage	Wattage (kw)	Amps Per Leg	NEMA Plug	Approximate Shipping lbs. (kg)	Weight Installed lbs. (kg)
HSCO14	39.5 (100.3)	30.8 (78.2)	17.8 (45.2)	208V/240V 3 Phase	13,800/ 1 5 , 9 0 0	33.1/38.2	15-50 3 Phase 50 Amp	244 (110.7)	154 (69.9)
HSCO16	41.8 (106.2)	32.8 (83.3)	17.8 (45.2)	208V/240V	13,800/ 15,900	33.1/38.2	15-50 3 Phase 50 Amp	293 (133.0)	188 (85.3)

Typical Specifications

Holman Turbo-Max Conveyor Ovens are constructed of stainless and durable aluminized steel. Ovens are designed with 14" belt width, 20" cook chamber, dwell time control (0:15-12:00 approx), reversible belt impingement nozzles/columnating plate sets (two on top), removable from chamber ends top toasting elements are metal-sheathed U-tubes with reflectors (two nozzles between three reflectors) bottom toasting elements (metal U-tubes) below conveyor frame in air return path air heat elements near bottom of bake chamber Programmable controller: Top toast (0-100%), Bottom toast (0-100%), air temp (adjustable, 140°-650°F (maximum range) and cook time (dwell). Eight menus available or individual parameter programming. Removable conveyor assembly, crumb tray/ heat shield ends, floor crumb tray, tunnel shutters All elements can be changed by removing front panel only. Sleep mode monitors chamber temperature for cool down of fan and controls (even while turned off). Patent pending.

Due to periodic changes in designs, methods, procedures, policies and regulations, the specifications contained in this sheet are subject to change without notice. While Star Manufacturing exercises good faith efforts to provide information that is accurate, we are not responsible for errors or omissions in information provided or conclusions reached as a result of using the specifications. By using the information provided, the user assumes all risks in connection with such use.

Star Manufacturing International, Inc. - 10 Sunnen Drive - P.O. Box 430129 - St. Louis, MO 63143-3800
Phone: (800) 264-7827 - FAX: (800) 264-6666 - www.star-mfg.com