BELGIAN WAFFLE BAKERS

Models SWB7RBE & SWB8RBLE

Features/Benefits:

- ★ Star's Belgian Waffle Bakers make belgian waffles for breakfast, snacks or anytime you want delicious waffles.
- ★ Heavy-duty cast aluminum round grids make an average of 20 waffles per hour. Waffles are 1-1/4" thick in the 7" model and 1" thick in the 8" waffle baker.
- ★ Heavy-duty hinge allows for rotating baker 180° insuring even distribution of batter for quality gourmet waffles.
- ★ Digital electronic timer from 0 to 9:59 minutes with digital temperature control from 250° to 425°F takes the guesswork out of preparing waffles.
- ★ Metal sheathed tubular elements located on top and bottom grid provide even heat distribution.
- ★ Easy to read on/off switch with indicator light signals when waffles are ready.

Model SWB7RBE

Applications:

From cafes and coffee shops to full service restaurants, Star's Belgian Waffle Bakers deliver delicious waffles day after day.

Quality Construction:

Star's Belgian Waffle Bakers are built of polished stainless steel with heavy-duty cast aluminum grids and feature a heavy-duty aluminum hinge. Metal sheathed tubular elements located in the top and bottom grids. Model SWB7RBE is provided with NEMA 5-15 plug for 120V and a NEMA 6-15 plug for 208V or 240V and CEE7-7 for 230V. Unit SWB8RBLE is provided with NEMA 5-15 plug for 120V and NEMA 6-15 plug for 208V or 240V and CEE7-7 Plug for 230V.

Warranty:

Belgian Waffle Bakers are covered by Star's one year parts and labor Warranty.

c UL us LISTED

CLASSIFIED UL EPH

CE

QUALITY MANAGEMENT SYSTEM CERTIFICATION ISO 9001:2000

Star Manufacturing International Inc. - 10 Sunnen Drive - P.O. Box 430129 - St. Louis, MO 63143-3800

Phone: (800) 264-7827 - FAX: (800) 264-6666 - www.star-mfg.com

BELGIAN WAFFLE BAKERS

Models SWB7RBE & SWB8RBLE

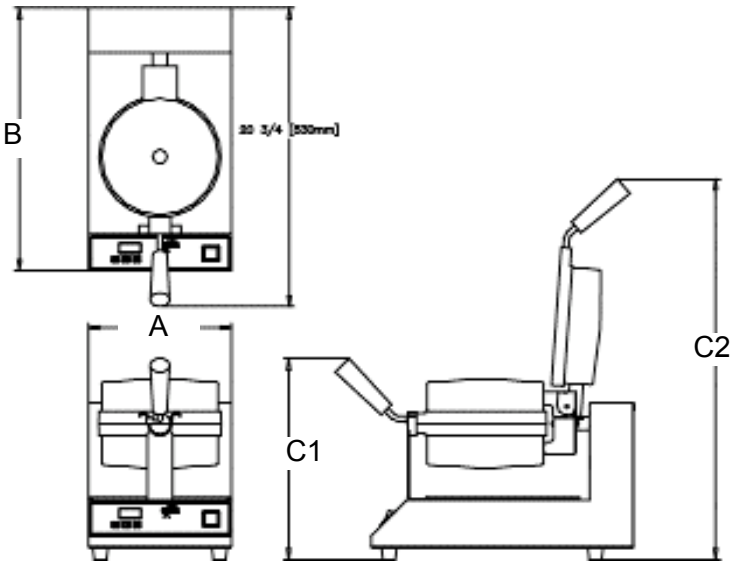

Model Specifications

Model No.	Dimensions (A) Width Inches (cm)	(B) Depth Inches (cm)	(C1 CLOSED) Height Inches (cm)	(C2 OPEN) Height Inches (cm)	Voltage	Wattage	Amps	NEMA	Approximate Weight Shipping lbs. (kg)	Installed lbs. (kg)
SWB7RBE	10 (25.4)	18-1/4 (46.3)	14 (35.5)	25-1/2 (64.7)	120	1,000	8.3	5-15P	28 (13.0)	25 (11.0)
					208	751	3.6	6-15P		
					240	1,000	4.2	6-15P		
					230	920	4.0	CEE7-7		
SWB8RBLE	10 (25.4)	18-1/4 (46.3)	14 (35.5)	26-1/2 (67.3)	120	1,320	11	5-15P	31 (14.0)	28 (12.7)
					208	990	4.8	6-15P		
					240	1,320	5.5	6-15P		
					230	1,210	5.3	CEE7-7		

Typical Specifications

Waffle Bakers are built of polished stainless steel and heavy-duty cast aluminum grids, uniform top and bottom. The grids are 7" producing a 1-1/4" and 8" diameter producing a 1” thick Belgian Waffle. The unit has a heavy-duty aluminum hinge for opening the top assembly when loading waffle mix and for rotating by 180° the head assembly when cooking. The Belgian Waffle Baker has metal sheathed tubular elements in both grids. A electronic temperature control to provide better temperature control. Belgian Waffle Bakers has digital electronic timer with precision settings, heavy-duty rocker switch with an indicator light and a stainless steel drip tray. The model SWB7RB has a NEMA 5-15 plug for 120V and a NEMA 6-15 plug for 208V or 240V and CEE7-7 for 230V. The model SWB8RBL has a NEMA 5-15 for 120V and NEMA 6-15 plug for 208V or 240V and CEE7-7 Plug for 230V. Units are listed by Underwriter's Laboratories. Printed in the U.S.A.

Due to periodic changes in designs, methods, procedures, policies and regulations, the specifications contained in this sheet are subject to change without notice. While Star Manufacturing exercises good faith efforts to provide information that is accurate, we are not responsible for errors or omissions in information provided or conclusions reached as a result of using the specifications. By using the information provided, the user assumes all risks in connection with such use.

Star Manufacturing International Inc. - 10 Sunnen Drive - P.O. Box 430129 - St. Louis, MO 63143-3800
Phone: (800) 264-7827 - FAX: (800) 264-6666 - www.star-mfg.com