# Refrigerated
## Topping Rail

Models: ☐ RTR-8 ☐ RTR-4

PRODUCT: QUANTITY: ITEM #:

## Designed Smart

### RTR-8 Refrigerated Countertop Unit

- Refrigerated counterop system that keeps everything at NSF safe temperateures.
- Holds 4 pans 1/6th size by 4” deep in the lower section and 4 pans 1/6th size by 4” deep in the lower section and 4 pans 1/6th size by 6” deep in the upper section .
- Each pan has its own hinged, removable cover.
- All pans are completely removable for easy cleaning.
- All stainless steel construction and 1/2” nonadjustable legs.
- Cold wall refrigeration system utizies a 1/5 HP compressor. Pumps are avaliable.

*RTR-8 Refrigerated Topping Rail*

### RTR-4 Refrigerated Countertop Unit

- Smaller model for tight counter space
- Refrigerated countertop system that keeps everything at NSF safe tempearatures.
- Holds 4 pans 1/6th size by 6” deep.
- Each pan has its own hinged, removable cover.
- All pans are comletely removable for easy cleaning.
- All stainless steel construction and 1/2” nonadjustable legs.
- Cold wall refrigeration system utilizes at 1/6 HP compressor.

*RTR-4 Refrigerated Topping Rail*

## Built Solid

### Reliability backed by APW Wyott’s Warranty

- APW Wyott Refrigerated Topping Rails are backed by a 1-year parts and labor warranty, including on-site service calls within 50 miles of authorized service technicians.
- Certified by the following agencies:

c UL US

UL SANITATION

PROTECTED BY APW WYOTT'S 1 YEAR LIMITED WARRANTY

## APW Wyott Design Features

- Stainless steel construction
- RTR-8 has 1/5 HP refrigeration unit
- RTR-4 has 1/6 HP refrigeration unit
- Removable polycarbonate food wells with hinged acrylic covers.
- Optional 4” adjustable legs available for the RTR-8

## Options

- LEGS-4 4” leg package (RTR-8 only) (4939100)
- COMP-5 5-year compressor warranty

*See reverse side for product specifications.*

*APW Wyott Foodservice Equipment Company · 729 Third Ave., Dallas, TX 75226*
*(800) 527-2100 · (214) 421-7366 · Fax (214) 565-0976 · www.apwwyott.com · info@apwwyott.com*

*Rev. 5/22/2005*

# Refrigerated
## Topping Rail

Models: ☐ RTR-8 ☐ RTR-4

PRODUCT: QUANTITY: ITEM #:

Model: RTR-8

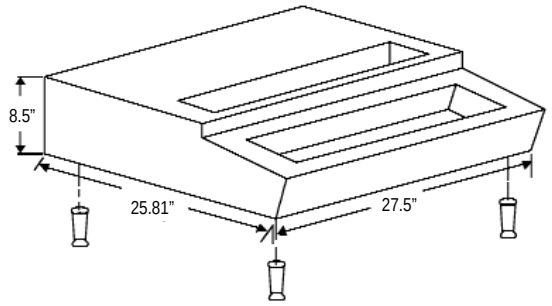


Model: RTR-4

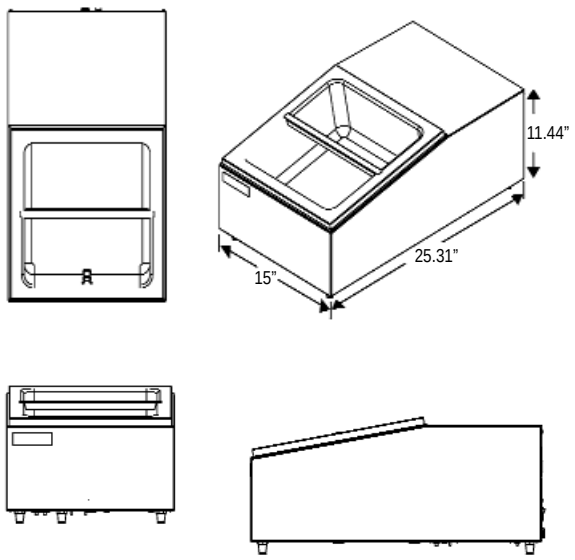


## PRODUCT SPECIFICATIONS

### Construction:

Stainless steel exteriors with stainless steel food wells. RTR-8 utilizes 1/5 HP refrigeration unit. RTR-4 utilizes a 1/6 HP unit. RTR-8 comes with 8 hinges polycarbonate pans. RTR-4 comes with 4 hinged polycarbonate pans. Refrigeration is a cold wall system and utilizes a R-134a (CFC free) refrigerant.

### Electrical Specifications:

RTR-8: 120V, 480W, 60 Hz, 1 Ph, 4 Amps
RTR-4: 120V, 360W, 60 Hz, 1 Ph, 3 Amps

### Capacity:

RTR-8 holds (4) 1/6 size 4” deep pans and (4) 1/6 size 6” deep pans (pans and covers included)
RTR-4 holds (4) 1/6 size 6” deep pans

### Overall Dimensions:

RTR-8: 8 1/2”H x 27 1/2”W x 25 13/16”D (21.6 cm x 69.9 cm x 65.6 cm)

RTR-4: 11 7/16”H x 15”W x 25 5/16”D (29 cm x 38 cm x 64.3 cm)

### Shipping:

RTR-8: 95 lbs. (43.2 kg)
RTR-4: 70 lbs. (33.6 kg)

Freight Class: 100
FOB: Cheyenne, WY

**APW Wyott reserves the right to modify specifications or discontinue models without incurring obligation.*

*APW Wyott Foodservice Equipment Company · 729 Third Ave., Dallas, TX 75226*
*(800) 527-2100 · (214) 421-7366 · Fax (214) 565-0976 · www.apwwyott.com· info@apwwyott.com*
*Rev. 5/22/2005*
*# 1608*