NEMCO™
FOOD EQUIPMENT

Item No. _____

Quantity _____

AIA File No. _____

WAFFLE BAKERS:
Model Nos. 7000, 7000-S,7000-240
7000-S240, 7000-2, 7000-2S
7000-2240, 7000-2S240

BELGIAN WAFFLE BAKERS:
Model Nos. 7020, 7020-1, 7020-S
7020-1S, 7020-208, 7020-1208, 7020-1S208,
7020-S208, 7020-240, 7020-S240

WAFFLE BAKERS and BELGIAN WAFFLE BAKERS

7000-2S **7000-S**

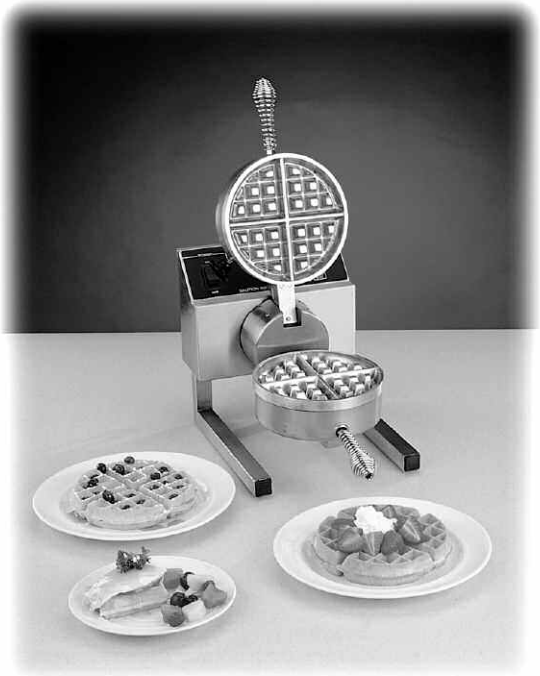

7020

Digitally controlled, single and dual-grid NEMCO Waffle Bakers let you serve crisp, golden brown waffles with convenience and ease. Our exclusive floating hinge allows the top grid to rise as the waffle bakes. Up to 20, 7” diameter waffles can be made per hour/grid.

NEMCO’s Belgian Waffle Bakers combine digitally controlled precision cooking with heavy-duty cast aluminum construction and the grid rotation lets you easily serve consistently great tasting, and uniform crisp waffles. Up to 20, 7” diameter waffles can be made per hour.

Standard Features:
- Digital Programmable controls with count down timer
- Standard LED display and electronic audible alarm
- Top Mounted Control Panel, minimizes mess
- Single or Double grids available in waffle bakers
- Belgian Waffle Baker available with fixed (removable with tools) or removable grids, (removable without tools)
- Belgian Waffle Baker grids rotate to make fluffier waffles and lock for reducing batter overflow
- Series 7000 is available in 120V or 240V units
- Series 7020 is available in 120V, 208V, and 240V units
- Coiled Spring “Cool Touch” handles
- Constructed of brushed stainless steel and stainless steel tubing
- Cast Aluminum Grids
- UL, CUL, NSF listed

Accessories:
- Non-stick coating available on Waffle Baker and Belgian Waffle Baker
- Drip Tray for Belgian Waffle Baker

NEMCO Food Equipment, LTD.
301 Meuse Argonne
P.O. Box 305
Hicksville, OH 43526
(800) 782-6761
Phone (419) 542-7751
FAX (419) 542-6690
www.nemcofoodequip.com

Printed 5/06 Printed in U.S.A.

AIA File No._____

Model Nos.

Waffle Baker:	7000	7000-240	7000-2	7000-2240	
Non-stick Coating:	7000-S	7000-S240	7000-2S	7000-S240	
Belgian Waffle Baker:	7020	7020-1	7020-208	7020-1208	7020-240
Non-stick Coating:	7020-S	7020-1S	7020-S1208	7020-S208	7020-S240

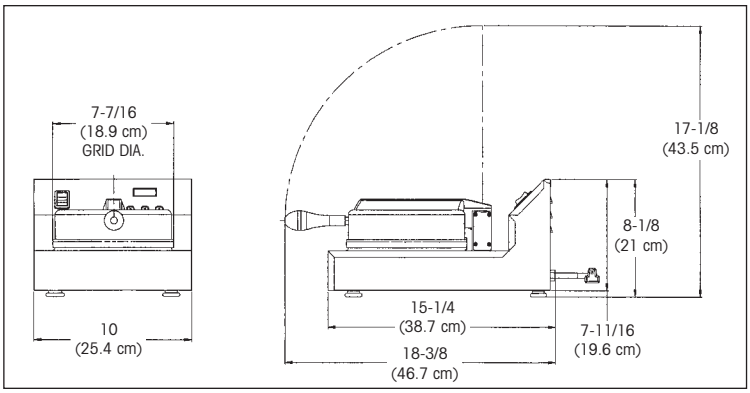

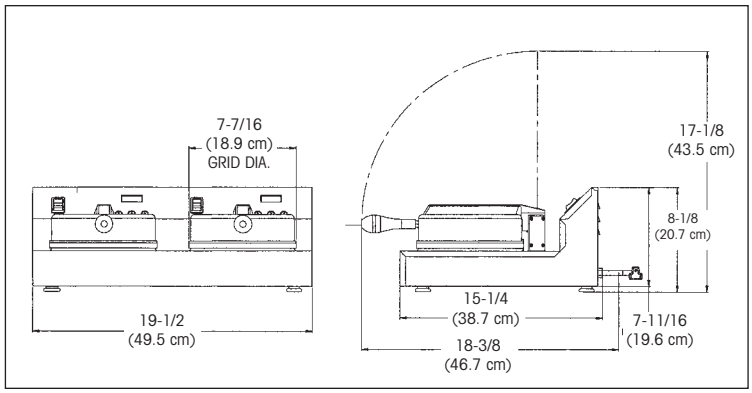

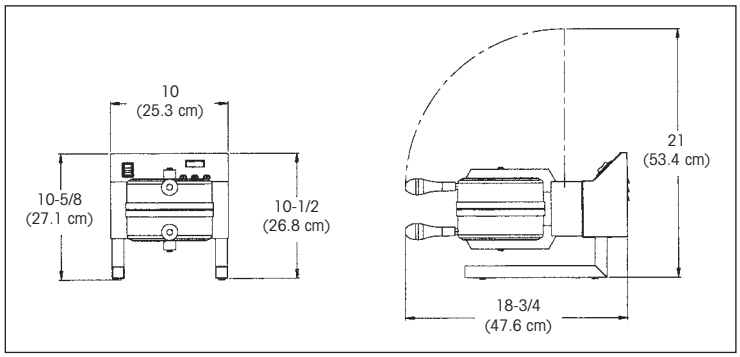

Specifications:

Model No.	Grids	Width Inches Inches/(cm)	Depth Inches Inches/(cm)	Height** Inches/(cm)	Voltage	Rated Wattage	Noninal Amps	Operating Temperature (pre-heat time)	NEMA Plug Configuration	Unit Weight lbs./ (Kg)	Shipping Weight lbs./ (Kg)
7000, 7000-S*	1-7″	10 (25.4)	15 1/4 (38.8)	8 1/8 (20.7)	120	890	14.8	250-410º (12 minutes)	5-15P	17 (7.8)	21 (9.6)
7000-240, 7000-S240*	1-7″	10 (25.4)	15 1/4 (38.8)	8 1/8 (20.7)	240	890	7.4	250-410º (12 minutes)	6-15P	17 (7.8)	21 (9.6)
7000-2, 7000-2S*	2-7″	19 1/2 (49.5)	15 1/4 (38.8)	15 1/4 (20.7)	120	1780	14.8	250-410º (12 minutes)	5-15P	32 (14.6)	38 (17.3)
7000-2240, 7000-S240*	2-7″	19 1/2 (49.5)	15 1/4 (38.8)	15 1/4 (20.7)	240	1780	7.4	250-410º (12 minutes)	6-15P	32 (14.6)	38 (17.3)
7020, 7020-S*	1-7″ removable	10 (25.4)	19 (48.3)	10 3/4 (27.3)	120	980	8.2	250-410º (12 minutes)	5-15P	19 1/2 (8.9)	26 (11.8)
7020-1, 7020-1S*	1-7″ fixed	10 (25.4)	19 (48.3)	10 3/4 (27.3)	120	980	8.2	250-410º (12 minutes)	5-15P	19 1/2 (8.9)	26 (11.8)
7020-208, 7020-S208*	1-7″ removable	10 (25.4)	19 (48.3)	10 3/4 (27.3)	208	980	4.7	250-410º (12 minutes)	6-15P	19 1/2 (8.9)	26 (11.8)
7020-240, 7020-S240*	1-7″ removable	10 (25.4)	19 (48.3)	10 3/4 (27.3)	240	980	4.1	250-410º (12 minutes)	6-15P	19 1/2 (8.9)	26 (11.8)

* Non-stick coating on grids
** Height is with the top closed Waffle Baker open =17 1/8″ (43.5cm), Belgian Waffle Baker = 21″ (53.4cm)

Optional Accessory

Model 77241 Drip Tray for Belgian Waffle Bakers.

Typical Specifications

NEMCO Waffle Bakers shall be constructed with stainless steel and aluminum. They shall have uncoated aluminum grids or non-stick coated grids. All units shall have a full sheath ring heating element with a maximum temperature of 410ºF, a programmable control board, with LED display, and a "Cool Touch" coiled spring handle. 120V models shall come with a NEMA 5-15P plug and the 208/240V models shall have a NEMA 6-15P plug attached to the 42" cords. All machines shall be UL, CUL, and NFS listed.

NEMCO FOOD EQUIPMENT
NEMCO Food Equipment, LTD.
301 Meuse Argonne, P.O. Box 305
Hicksville, OH 43526
(800) 782-6761
Phone (419) 542-7751
FAX (419) 542-6690
www.nemcofoodequip.com

5/06 Printed in U.S.A.