Standard Drainboards

Standard Series

Model: _____

Item #: _____ Quantity: _____

Project: _____

1800 or 2100 Series Available
(see reverse)

- **Drainboard:**
  20 gauge 304 series embossed stainless steel reinforced with welded braces every six inches. 3/4" radius on all vertical and horizontal edges.
- **Front Apron:**
  22 gauge 304 series stainless steel clad over 20 gauge galvaneal.
- **Backsplash:**
  22 gauge 304 series stainless steel.
- **Sides:**
  20 gauge galvaneal.
- **Back and Bottom:**
  20 gauge galvaneal.
- **Legs:**
  1 5/8" tubular 16 gauge galvanized steel with grey plastic bullet foot.
- **Plumbing:**
  1" IPS drain connection.

Accessories

- ☐ Standard Single Tier Keyhole Speedrail (available sizes: 24", 30", 36", and 48")
- ☐ Standard Double Tier Keyhole Speedrail (available sizes: 24", 30", 36", and 48")
- ☐ 1800 and 2100 Corner Return
- ☐ Side Splash
- ☐ Stainless Steel Legs
- ☐ Additional Accessories (see Accessory Sheet)

Approved By: _____

Krowne Metal Corporation
257 Verona Ave. Newark, New Jersey 07104
www.krowne.com **sales@krowne.com**

Phone: 800-631-0442
FAX: 973-485-1424

Standard Drainboards

Model: _____ Item #: _____Quantity: _____ Project: _____

1800 Series

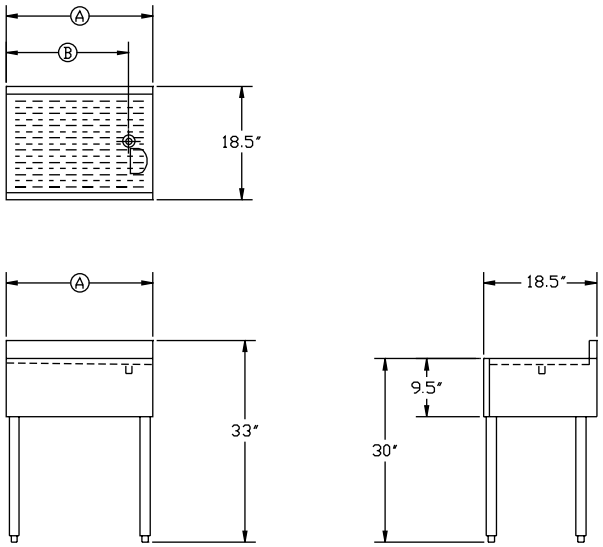

Model Numbers	Length Ⓐ	Left Side to Drain Ⓑ	Weight lbs
18-GS12	1'-0"	6"	20
18-GS18	1'-6"	14"	26
18-GS24	2'-0"	20"	30
18-GS30	2'-6"	26"	35
18-GS36	3'-0"	32"	40
18-GS48	4'-0"	24"	50

2100 Series

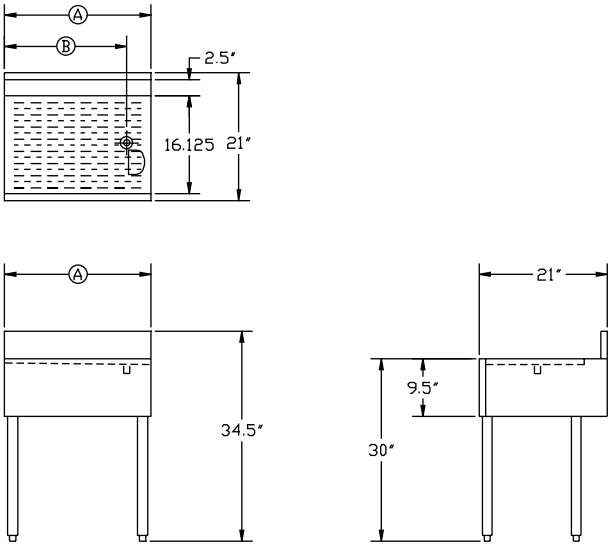

Model Numbers	Length Ⓐ	Left Side to Drain Ⓑ	Weight lbs
21-GS12	1'-0"	6"	25
21-GS18	1'-6"	14"	30
21-GS24	2'-0"	20"	40
21-GS30	2'-6"	26"	45
21-GS36	3'-0"	32"	50
21-GS48	4'-0"	24"	60

Mechanical Requirements:

1" IPS drain connection

Approved By: _____

Due to our commitment to continued product improvement, specifications are subject to change without notice.

Krowne Metal Corporation

257 Verona Ave. Newark, New Jersey 07104

www.krowne.com sales@krowne.com

Phone: 800-631-0442

FAX: 973-485-1424

10/04