Electrolux

DITO

Mighty Green Food Processor

ITEM # _____

MODEL # _____

PROJECT NAME # _____

SIS # _____

AIA # _____

Mighty Green
Mighty Green Food Processor

601410 (MIG4U) 115 V/1p/60Hz

Short Form Specification

Item No. _____

Unit to be Electrolux Dito MIG4U Mighty Green Food Processor. Electrical characteristics to be 115 V SINGLE-phase operation with 1 speed at 1100 rpm. Vegetable prep attachment especially designed for quality, continuous feed slicing, shredding, grating and julienne with 11 different processing plates. A compact design for operator convenience the Mighty Green occupies minimal counter space. Housing constructed of plastic with rubber feet on base. Removable top with feed hopper, pusher and deflector plate are plastic.

5-15P

Approval: _____

Main features

- Continuous feed model.
- Power: 1/3 HP—Single phase.
- 1 speed: 1100 rpm plate speed.
- 250 watts motor
- Red OFF, Green ON Buttons
- Compact Design
- Direct Shaft Drive
- Round and Half Moon Feed Hoppers
- Hopper easily removed for cleaning.
- All Polycarbonate plastic Hopper and Housing
- Magnetic safety system and motor brake. Prevents machine from running when pusher plate swings away or is open.
- Automatic restart of the machine with the half-moon shaped pusher in position.
- Delivered with :
  - All plastic vegetable prep attachment with a half moon hopper (LxWxH—5.5″ x 3″ x 5″) and a cylindrical hopper (diameter 2″).
  - 4 blades included: TD2 1/16″ (2mm) slicing blade, TD5 3/16″ (5mm) slicing blade, RD4 1/8″ (4mm) grating blade, ED2 5/64″ (2mm) julienne blade
- Complete selection of 11 blades available.
- Machine Dimensions: (H×L×W): 16.25″ × 13.7″ × 8.5″
- Approximate shipping weight—31 lbs
- ETL electrical and sanitation listed
- NEMA # : 5-15P
- 2 year parts warranty, 1 year labor.

Accessories

- Slicing Blade 3/16″ (5 mm) (PNC 653001)
- Slicing Blade 1/16″ (2 mm) (PNC 653176)
- Julienne Blade 5/64″ (2 mm) (PNC 653171)
- Grating Blade 1/8″ (4 mm) (PNC 653004)

Optional Accessories

- Wavy Cut Blade 1/16″ (2 mm) (PNC 653007)
- Slicing Blade 9/32″ (7 mm) (PNC 653002)
- Slicing Blade 3/16″ (5 mm) (PNC 653001)
- Slicing Blade 1/8″ (3 mm) (PNC 653177)
- Slicing Blade 1/16″ (2 mm) (PNC 653176)
- Julienne Blade 5/64″ (2 mm) (PNC 653171)
- Julienne Blade 5/32″ (4 mm) (PNC 653006)
- Grating Blade 5/64″ (2 mm) (PNC 653178)
- Grating Blade 3/32″ (3 mm) (PNC 653003)
- Grating Blade 1/8″ (4 mm) (PNC 653004)
- Grating Blade 1/4″ (7 mm) (PNC 653005)

Electrolux Professional, Inc.
www.electroluxusa.com/professional
3225 SW 42nd Street, Fort Lauderdale, Florida, 33312 • Telephone Number: 866-449-4200 • Fax Number: 954-327-6789

Electrolux DITO
Mighty Green Food Processor

Electrolux DITO

Mighty Green Food Processor

Front View

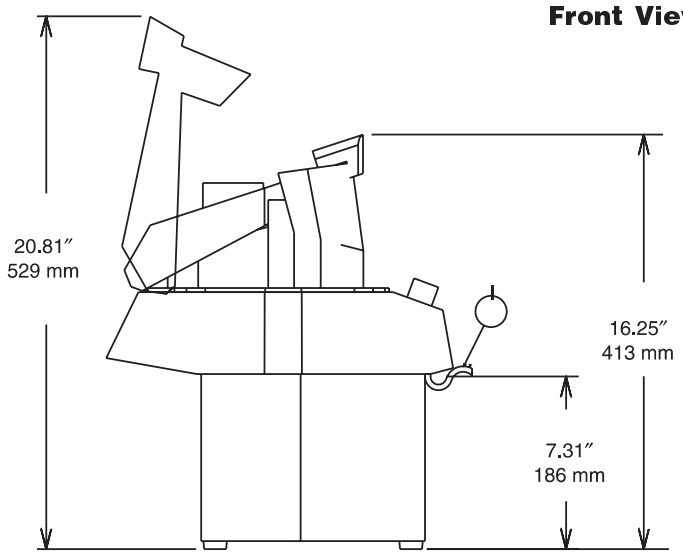

Top View

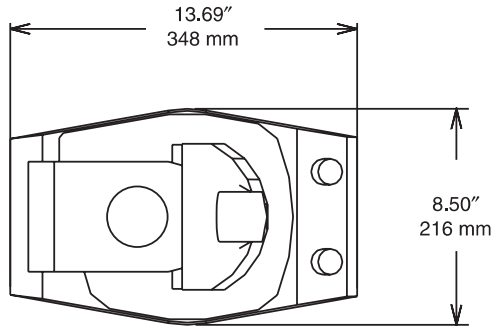

Electric

Supply voltage:

601410 (MIG4U) 115V/1ph/60Hz – 3.6A - 1/3HP

Key Information

Uses of Food Processor

Types of Cuts

- TD slicing blades: straight cuts from 2 to 7 mm.
- WD slicing blades: crinkle cuts of 2 mm.
  - Vegetables: potatoes, carrots, celery, red and white cabbages, mushrooms, cucumbers, chicory, onions, leeks, radish, etc.
  - Fruits: almonds, bananas, lemons, oranges, apples, etc.
- RD Grating blades: grating from diameter 2mm to diameter 7 mm
  - Vegetables: carrots, grated celery, beets, horseradish, etc.
  - Other: mozzarella, walnuts, almonds, breadcrumbs, chocolate, etc.
- ED shredding blades: for shredding
  - Thin 2 x 2 mm: potatoes, celery, and carrots.
  - Medium 3 x 3 mm: matchstick potatoes, carrots, etc.

The company reserves the right to make modifications to the products without prior notice. All information correct at time of printing.
4-6-06