Electrolux

DITO

Multi Green Combination Food Processor

ITEM # _____

MODEL # _____

PROJECT NAME # _____

SIS # _____

AIA # _____

Multi Green Combination Food Processor

601411 (MUGU)	Multi Green Combination Food Processor 115 V/1p/60Hz (Plastic Bowl)
601368 (MUGXU)	Multi Green Combination Food Processor 115 V/1p/60Hz (Stainless Steel Bowl)

Short Form Specification

Item No. _____

Unit to be Electrolux Dito MUGU or MUGXU Multi Green Combination Food Processor. Electrical characteristics to be 115V SINGLE-phase operation with 1 speed at 1700 rpm. Vegetable prep attachment specially designed for quality, continuous feed slicing, shredding, grating and julienne with 11 different processing plates. Bowl attachment designed as vertical cutter-mixer: chop, puree, blend, and mix. A compact design for operator convenience the Multi Green occupies minimal counter space. Housing constructed of plastic with rubber feet on base. Removable top cover with feed hopper, pusher and deflector plate of plastic.

INTERTEK ETL LISTED US INTERTEK ETL SANITATION LISTED 5-15P

Approval: _____

Main features

- Continuous feed model.
- Power: 1/2 HP—Single phase.
- 1 speed: 1700 rpm plate speed.
- 370 watts motor
- Red OFF, Green ON Buttons
- Compact Design
- Direct Shaft Drive
- Round and Half Moon Feed Hoppers.
- Hopper easily removed for cleaning.
- All Polycarbonate plastic Hopper and Housing
- Magnetic safety system and motor brake. Prevents machine from running when pusher plate swings away or is open.
- Automatic restart of the machine with the half-moon shaped pusher in position.
- Delivered with :
  - 3.2 Qt. gray cutter bowl in plastic (PNC 601411) **or** Stainless steel (PNC 601368) with smooth edge "S" blade included.
  - All plastic vegetable prep attachment with a half moon hopper (LxWxH—5.5″ x 3″ x 5″) and a cylindrical hopper (diameter 2″).
  - 4 blades included: TD2 1/16″ (2mm) slicing blade, TD5 3/16″ (5mm) slicing blade, RD4 1/8″ (4mm) grating blade, ED2 5/64″ (2mm) julienne blade
- Complete selection of 11 blades available.
- Dimensions: (H×L×W): 16.25″ × 13.7″ × 8.5″
- Approx. shipping weight—35 lbs
- ETL electrical and sanitation listed
- NEMA # : 5-15P
- 2 year parts warranty, 1 year labor.

Accessories

• Slicing Blade 3/16″ (5 mm)	(PNC 653001)
• Slicing Blade 1/16″ (2 mm)	(PNC 653176)
• Polycarbonate Lid for Food Processor	(PNC 653512)
• Julienne Blade 5/64″ (2 mm)	(PNC 653171)
• Grating Blade 1/8″ (4 mm)	(PNC 653004)
• Fresh Cut Hopper with safety lever	(PNC 653144)
• Cutter Equipment-Stainless steel Bowl +Lid+Rotor	(included with model MUGXU only)
• Cutter Equipment-Plastic Bowl+Lid+Rotor	(Included with model MUGU only)

Optional Accessories

• Wavy Cut Blade 1/16″ (2 mm)	(PNC 653007)
• Smooth Blade Rotor	(PNC 653146)
• Slicing Blade 9/32″ (7 mm)	(PNC 653002)
• Slicing Blade 3/16″ (5 mm)	(PNC 653001)
• Slicing Blade 1/8″ (3 mm)	(PNC 653177)
• Slicing Blade 1/16″ (2 mm)	(PNC 653176)
• Polycarbonate Lid for Food Processor	(PNC 653512)
• Julienne Blade 5/64″ (2 mm)	(PNC 653171)
• Julienne Blade 5/32″ (4 mm)	(PNC 653006)
• Grating Blade 5/64″ (2 mm)	(PNC 653178)
• Grating Blade 3/32″ (3 mm)	(PNC 653003)
• Grating Blade 1/8″ (4 mm)	(PNC 653004)
• Grating Blade 1/4″ (7 mm)	(PNC 653005)
• Fresh Cut Hopper with safety lever	(PNC 653144)
• Cutter Equipment-Stainless steel Bowl+Lid+Rotor	(PNC 653047)
• Cutter Equipment-Plastic Bowl+Lid+Rotor	(PNC 653145)
• Blade Storage Case	(PNC 653050)
• 3.2 QT.Stainless Steel Bowl-Cutter Mixer	(PNC 653487)
• 3.2 QT. Polycarbonate Bowl-Cutter Mixer	(PNC 653488)

Electrolux Professional, Inc.
www.electroluxusa.com/professional
3225 SW 42nd Street, Fort Lauderdale, Florida, 33312 • Telephone Number: 866-449-4200 • Fax Number: 954-327-6789

Electrolux DITO
Multi Green Combination Food Processor

Electrolux DITO

Multi Green Combination Food Processor

Front View

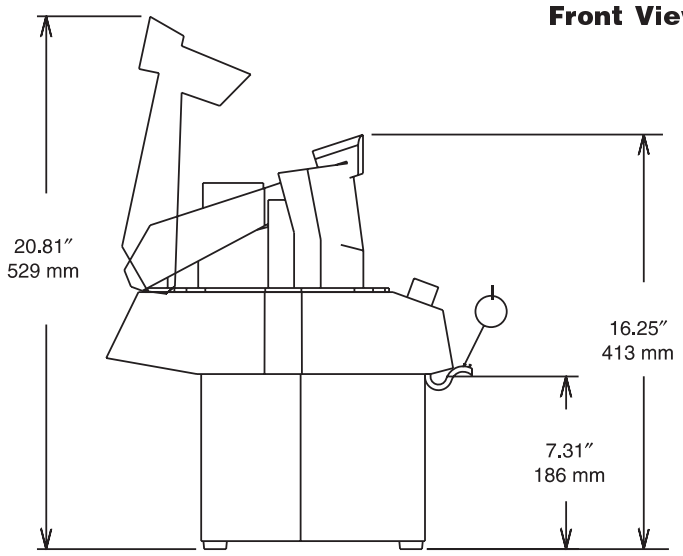

Top View

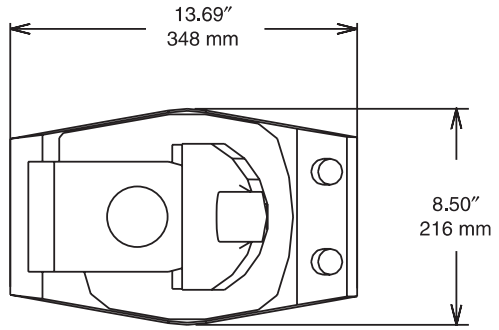

Electric

Supply voltage:

601411 (MUGU)	115 V/1p/60Hz – 6.3A - 1/2HP
601368 (MUGXU)	115 V/1p/60Hz – 6.3A - 1/2HP

Key Information

Uses of Food Processor

Types of Cuts

- TD slicing blades: straight cuts from 2 to 7 mm.
- WD slicing blades: crinkle cuts of 2 mm.
  - Vegetables: potatoes, carrots, celery, red and white cabbages, mushrooms, cucumbers, chicory, onions, leeks, radish, etc.
  - Fruits: almonds, bananas, lemons, oranges, apples, etc.
- RD Grating blades: grating from diameter 2mm to diameter 7 mm
  - Vegetables: carrots, grated celery, beets, horseradish, etc.
  - Other: mozzarella, walnuts, almonds, breadcrumbs, chocolate, etc.
- ED shredding blades: for shredding
  - Thin 2 x 2 mm: potatoes, celery, and carrots.
  - Medium 3 x 3 mm: matchstick potatoes, carrots, etc.

Uses of Food Processor

MEAT

Rough mincing
- Pates
- Small sausages
- Large sausages
- Minced meat

Fine mincing
- Stuffing
- Mousses

PASTRY
- Shortcrust
- Cold water paste
- Flan

POWDER
- Almonds
- Hazelnuts

FRUITS AND VEGETABLES
- Purees
- Mousses
- Syrups

CHOPPING
- Parsley
- Onions

The company reserves the right to make modifications to the products without prior notice. All information correct at time of printing.
4-6-06