Electrolux

DITO

ITEM # _____

MODEL # _____

PROJECT NAME # _____

SIS # _____

AIA # _____

TRS Food Processor

TRS Food Processor

603355 (TRS22)	TRS-22 Stainless Steel Food Processor 115 V/1p/60Hz
603343 (TRS23)	TRS-23 Stainless Steel Food Processor 115 V/1p/60Hz
603356 (TRS24)	TRS-24 Stainless Steel Food Processor 115 V/1p/60Hz
603358 (TRSU)	TRS-24 2 Speed Stainless Steel Food Processor 208-240 V/3p/60Hz

Short Form Specification

Item No. _____

Unit to be Electrolux Dito TRS Food Processor. Electrical characteristics to be 115 V SINGLE-phase operation with 1 speed at 430 rpm. Electrical characteristics for Dual Speed TRS-24 to be 208-240 V THREE-phase operation with 2 speed at 430/870 rpm. Vegetable prep attachment especially designed for quality, continuous feed slicing, shredding, grating and julienne and dicing capabilities with 32 different processing plates. All parts that come into contact with the food are in Stainless steel or plastic, can be removed for easy cleaning and are dishwasher safe. IPX5 (IP55) flat panel touch-control, waterproof panel.

15-20P with TRSU model only

Approval: _____

Main features

- Continuous feed model.
- Power: 1/2 HP—Single phase (TRS-22 models), 2/3 HP—Single phase (TRS-23 models), 1 HP—Single phase (TRS-24 model). 1 HP—Three phase (TRSU model).
- 1 speed: 430 rpm plate speed. 2 speed: 430/870 rpm plate speeds.
- 370 watts (TRS-22 models), 500 watts (TRS-23 models), 750 watts (TRS-24 and TRSU models),
- Red OFF, Green ON Buttons
- Compact Design
- Angled Front
- Planetary Drive
- Large Round and Large 3/4 Moon Hopper
- Hopper easily removed for cleaning.
- Magnetic safety system and motor brake. Prevents machine from running when pusher plate swings away or is open.
- Automatic restart of the machine with the 3/4 Moon shaped pusher in position.
- Delivered with :
- All Stainless steel vegetable prep attachment with a 3/4 Moon Hopper (L × W × H—6.5″ x 3″ x 6″) and a cylindrical hopper (diameter 2″).
- Complete selection of 32 blades and disks available.
- Processor has dicing and french fry capablities.
- Dimensions: (H × L × W): 19.75″ × 19.7″ × 9.9″
- Approx. shipping weight—56 lbs
- ETL electrical and sanitation listed/CETL (Canada).
- NEMA# 5-15P on Single Speed Models and NEMA# L15-20P on Two Speed Model.
- 2 year parts warranty, 1 year labor.

Accessories

Slicing Blade 9/16″ (14 mm)	(PNC 653185)
Slicing Blade 5/16″ (8 mm)	(PNC 653108)
Slicing Blade 3/8″ (10 mm)	(PNC 653110)
Slicing Blade 1/8″ (3 mm)	(PNC 653103)
Slicing Blade 1/4″ (6 mm)	(PNC 653106)
Slicing Blade 1/32″ (1 mm)	(PNC 653101)
Slicing Blade 1/16″ (2 mm)	(PNC 653102)
Julienne Blade 5/32″ (4 × 4 mm)	(PNC 653154)
Julienne Blade 1/8″ (3 × 3 mm)	(PNC 653153)
Julienne Blade 1/16″ (2 × 2 mm)	(PNC 653214)
Dicing Grid (5 × 5 × 5 mm)	(PNC 653566)
Dicing Grid 5/16″ (8 × 8 × 8 mm)	(PNC 653567)
Dicing Grid 3/8″ (10 × 10 × 10 mm)	(PNC 653568)
Dicing Grid 1/2″ (12 × 12 × 12 mm)	(PNC 653569)
Dicing Grid 3/4″ (20 × 20 × 20 mm)	(PNC 653570)
Grid for French Fries or Vegetable Sticks 1/4″ (6 × 6 × 6 mm)	(PNC 653571)
Grid for French Fries or Vegetable Sticks 5/16″ (8 × 8 × 8 mm)	(PNC 653572)
Grid for French Fries or Vegetable Sticks 3/8″ (10 × 10 × 10 mm)	(PNC 653573)
Grating blade for Parmesan and Bread	(PNC 653170)
Grating Blade for Nuts, Chocolate, Bread Crumbs	(PNC 653008)
Grating Blade (XX Course) 23/64″ (9 mm)	(PNC 653498)
Grating Blade (Medium) 1/8″ (3 mm)	(PNC 653163)
Grating Blade (Fine) 1/16″ (2 mm)	(PNC 653162)
Grating Blade (Extra Course) 9/32″ (7 mm)	(PNC 653167)
Grating Blade (Course) 5/32″ (4 mm)	(PNC 653164)
Curved Serrated Slicing Blade 3/8″ (10 mm)	(PNC 653511)
Curved Serrated Slicing Blade 3/16″ (5 mm)	(PNC 653115)
Curved Serrated Slicing Blade 1/8″ (3 mm)	(PNC 653113)
Curved Serrated Slicing Blade 1/32″ (1 mm)	(PNC 653111)
Curved Serrated Slicing Blade 1/16″ (2 mm)	(PNC 653112)
Wavy Cut Slicing Blade 1/8″ (3 mm)	(PNC 653123)
Wavy Cut Slicing Blade 1/4″ (6 mm)	(PNC 653126)
Wavy Cut Slicing Blade 1/16″ (2 mm)	(PNC 653122)
Stainless steel Worktable Folding Shelves+Blade Rack	(PNC 653283)
Table with Hotel Pan Polycarbonate Tray	(PNC 653180)

Electrolux Professional, Inc.
www.electroluxusa.com/professional
3225 SW 42nd Street, Fort Lauderdale, Florida, 33312 • Telephone Number: 866-449-4200 • Fax Number: 954-327-6789

Electrolux DITO

TRS Series
TRS Food Processor

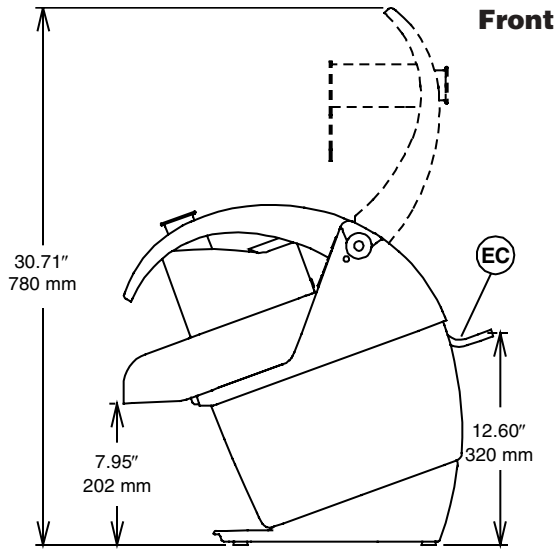

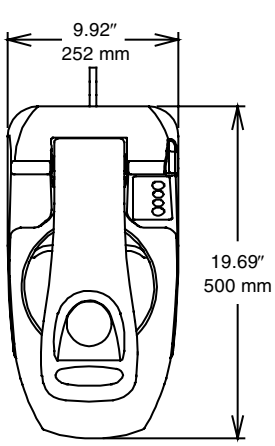

EC = Electrical connection

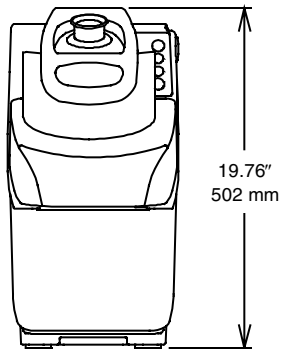

Electric

Supply voltage:

603355 (TRS22)	115 V/1p/60Hz – 6.3A - 1/2HP
603343 (TRS23)	115 V/1p/60Hz – 7.1A - 2/3HP
603356 (TRS24)	115 V/1p/60Hz – 10A - 1HP
603358 (TRSU)	208-240 V/3p/60Hz – 3.2A - 1HP

Key Information

NEW FEATURES

- Wide range of functions: slicing, mincing, grating, shredding and cutting into chips or cubes of all sizes.
- Plate speed at 430 RPM for precise cutting, slicing and dicing.
- Large round hopper (85°) allows food of greater dimension to be processed.
- Feeding arm with integrated long-vegetable hopper (tube pusher), 60 mm in diameter. Ideal for carrots, zucchini and cucumbers.
- Base inclined at 20° provides easy loading and discharging.
- High discharge zone permits the use of deep GN containers (up to 8 inches in height).
- Feeding arm and hopper are made entirely in Stainless steel. Aluminium motor housing.
- Plates and ejector may be removed in seconds by opening the cover.
- All parts that come into contact with the food are in Stainless steel or plastic, can be removed for easy cleaning and are dishwasher safe.
- IPX5 (IP55) flat panel touch-control, waterproof panel.
- Green button indicates ON, Red button indicates OFF.
- Pulse control for precise slicing.
- Asynchronous industrial motor with no brushes for high reliability and quiet functioning. Stainless steel motor shaft.
- Two separate safety switches stop the machine in order to protect the operator from potentially dangerous conditions.
- IP24 throughout entire machine.

The company reserves the right to make modifications to the products without prior notice. All information correct at time of printing.
1-9-08