Electrolux

DITO

# K25 Vertical Cutter-Mixer

ITEM # _____

MODEL # _____

PROJECT NAME # _____

SIS # _____

AIA # _____

## K25 Vertical Cutter-Mixer

| | |
|---|---|
| **601372 (K25U)** | K25 Vertical Cutter-Mixer (plastic bowl) 115 V/1p/60Hz |
| **601413 (K25XU)** | K25 Vertical Cutter-Mixer (s/s bowl) 115 V/1p/60Hz |

## Short Form Specification

**Item No.** _____

Unit to be Electrolux Dito K25U or K25XU K25 Vertical Cutter-Mixer. Electrical characteristics to be 115 V SINGLE-phase operation with 1 speed at 1700 rpm. Vertical Cutter-Mixer designed for vertical cutting and mixing in 3.2 quart quantities: puree, chop, blend, mix and knead dough. A compact design for operator convenience the K25 occupies minimal counter space. Housing constructed of plastic with rubber feet on base.

5-15P

**Approval:** _____

## Main features

- Power: 1/2 HP—Single phase.
- 1 speed: 1700 rpm plate speed.
- 370 watts motor
- Red OFF, Green ON, and PULSE Buttons
- Compact Design
- Direct Shaft Drive
- All Polycarbonate plastic or Stainless Steel Bowl
- Magnetic safety system and motor brake. Prevents machine from running when bowl lid swings away from magnetic switch or is open.
- Delivered with :
- 3.2 Qt. Polycarbonate or Stainless Steel bowl in plastic (PNC 601372) **or** Stainless steel (PNC 601413) with smooth edge "S" blade included.
- Complete selection of accessories available.
- Dimensions: (H×L×W): 14.6″ × 11.7″ × 8.5″
- Approx. shipping weight—31 lbs
- NEMA # : 5-15P
- 2 year parts warranty, 1 year labor

## Optional Accessories

- 3.2 Qt. Stainless Steel Bowl (PNC 653487)
- 3.2 Qt. Polycarbonate Bowl (PNC 653488)
- Polycarbonate Lid (PNC 653512)
- Smooth Blade Rotor (PNC 653146)

**Electrolux Professional, Inc.**
www.electroluxusa.com/professional
3225 SW 42nd Street, Fort Lauderdale, Florida, 33312 · Telephone Number: 866-449-4200 · Fax Number: 954-327-6789

Electrolux DITO
K25 Vertical Cutter-Mixer

Electrolux DITO

# K25 Vertical Cutter-Mixer

**Front View**

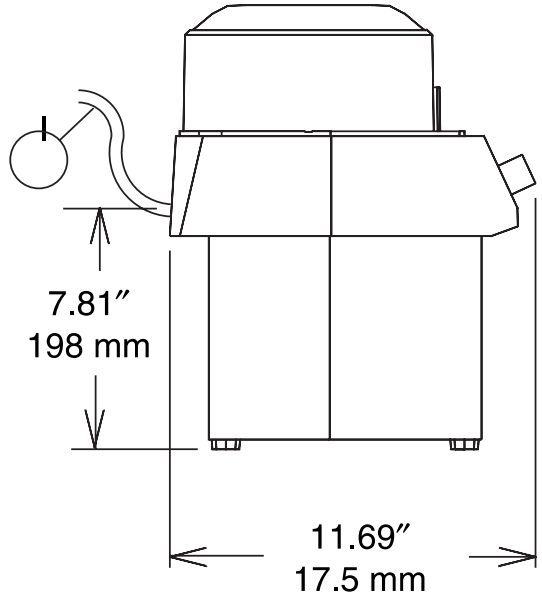


**Top View**

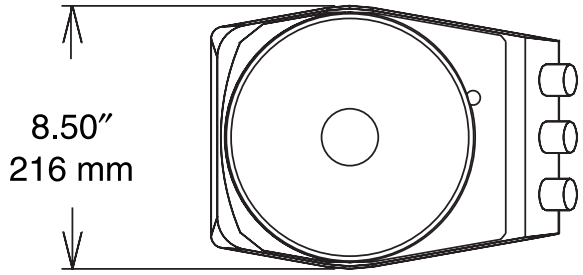


**Side View**

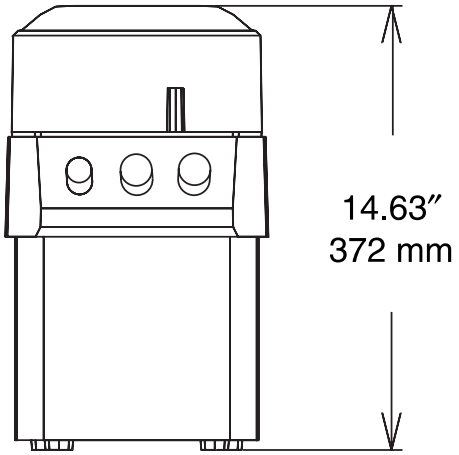


## Electric

**Supply voltage:**

| | |
|---|---|
| **601372 (K25U)** | 115 V/1p/60Hz - 1/2HP – 6.3A |
| **601413 (K25XU)** | 115 V/1p/60Hz - 1/2HP – 6.3A |

## Key Information

**Uses of Food Processor**

**MEAT**

Rough mincing
- Pates
- Small sausages
- Large sausages
- Minced meat

Fine mincing
- Stuffing
- Mousses

**PASTRY**
- Shortcrust
- Cold water paste
- Flan

**POWDER**
- Almonds
- Hazelnuts

**FRUITS AND VEGETABLES**
- Purees
- Mousses
- Syrups

**CHOPPING**
- Parsley
- Onions



The company reserves the right to make modifications to the products without proir notice. All information correct at time of printing.

4-6-06