Electrolux

DITO

ITEM # _____

MODEL # _____

PROJECT NAME # _____

SIS # _____

AIA # _____

K55 Vertical Cutter-Mixer

K55 Vertical Cutter-Mixer

603360 (K552VU) K55 VCM (s/s bowl) 2 SPEED
208-240 V/3p/60Hz

603363 (K55VVU) K55 VCM (s/s bowl) Variable SPEED
208-240 V/1p/50/60Hz

Short Form Specification

Item No. _____

Unit to be Electrolux Dito K552VU or K55VVU K55 Vertical Cutter-Mixer. Electrical characteristics to be 208-240 V, Three-phase operation with 2 speed at 1800 or 3600 rpm or to be 208-240 V, Single-phase operation with Variable speeds at 300-3600 rpm. Vertical Cutter-Mixer designed for vertical cutting and mixing in 5.8 quart quantities: puree, mix, chop, blend, mix and knead dough. A compact design for operator convenience the K55 occupies minimal counter space. Housing constructed of Stainless steel with rubber feet on base.

With L15-20P (for Model PNC 603360)

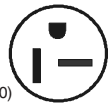

With 6-20P (for Model PNC 603363)

Approval: _____

Main features

- Power: 1-1/3 HP - Three phase 1-1/3 HP for Two Speed Model, and 1-3/4 HP for Variable Speed Model.
- 1 speed: 1800/3600 RPM for Two Speed Model, and 300-3600 RPM for Variable Speed Model.
- 1 kW for Two Speed Model, and 1.3 kW for Variable Speed Model.
- Red OFF, Green ON, and PULSE Buttons
- Compact Design
- Belt Drive
- All Stainless Steel Bowl
- Magnetic safety system and motor brake. Prevents machine from running when bowl lid swings away from magnetic switch or is open.
- Delivered with :
- 5.8 Qt. Stainless Steel bowl with microtooth edge “S” blade included.
- Complete selection of accessories available.
- Dimensions: (H×L×W): 18.5″ × 16.3″ × 10″
- Approx. shipping weight—51 lbs
- NEMA #: NEMA L15-20P for Two Speed Model, and NEMA 6-20P for Variable Speed Model.
- 2 year parts warranty, 1 year labor.

Included Accessories:

- Microtooth Blade Rotor - 5.8 Qt. VCM (PNC 653582)
- Lid + Bowl Scrapper for 5.8 Qt. VCM (PNC 653591)
- 5.8 Qt. Stainless Bowl (PNC 653590)

Optional Accessories:

- Smooth Blade Rotor - 5.8 Qt. VCM (PNC 653581)
- Microtooth Blade Rotor - 5.8 Qt. VCM (PNC 653582)
- Lid + Bowl Scrapper for 5.8 Qt. VCM (PNC 653591)
- 5.8 Qt. Stainless Bowl (PNC 653590)
- Kit for Vegetable Slicer conversion for the Variable Speed VCM (PNC 653594)

Electrolux Professional, Inc.
www.electroluxusa.com/professional
3225 SW 42nd Street, Fort Lauderdale, Florida, 33312 • Telephone Number: 866-449-4200 • Fax Number: 954-327-6789

Electrolux DITO
K55 Vertical Cutter-Mixer

Electrolux DITO

K55 Vertical Cutter-Mixer

Front View

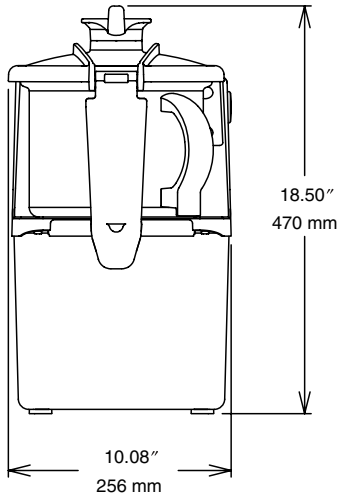

Side View

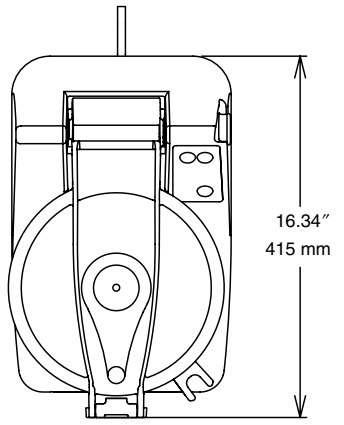

EC = Electrical connection

Top View

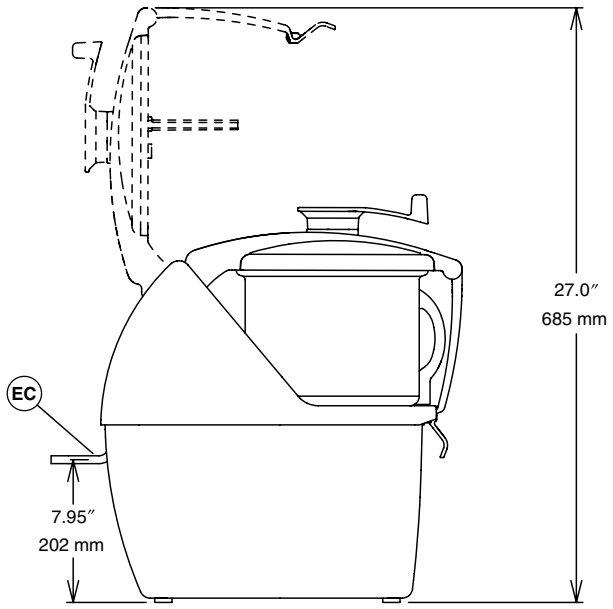

Electric

Supply voltage:

603360 (K552VU)	208-240 V/3p/60Hz – 4.2A
603363 (K55VVU)	208-240 V/1p/50/60Hz – 6A

Key Information

Uses of Food Processor

MEAT

Rough mincing
- Pates
- Small sausages
- Large sausages
- Minced meat
- Shellfish

Fine mincing
- Stuffing
- Mousses

PASTRY
- Shortcrust
- Cold water paste
- Flan

POWDER
- Almonds
- Hazelnuts

FRUITS AND VEGETABLES
- Purees
- Mousses
- Syrups

CHOPPING
- Parsley
- Onions

The company reserves the right to make modifications to the products without prior notice. All information correct at time of printing.
2-25-08