Electrolux

DITO

Greens Machine Series
VSD-10 – 10 gal.Vegetable Dryer

ITEM # _____

MODEL # _____

PROJECT NAME # _____

SIS # _____

AIA # _____

Greens Machine Series
VSD-10 – 10 gal.Vegetable Dryer

601563 (VSD-10) VSD-10 10 gal. Polyethylene Dryer
115 V/1p/60Hz

Short Form Specification

Item No. _____

Unit to be Electrolux Dito VSD-10 – 10 gal. Vegetable Dryer. Electrical characteristics to be 115 V SINGLE-phase operation with Single speed at 406 rpm. Heavy duty polyethylene body with an ergonomic design for easy use and cleanability. Countertop or Wall Mounted capabilities.

NSF

NEMA #: 5-15P

Approval: _____

Main features

- Easy to Reach Control Knob with adjustable ON/OFF 5 minute timer.
- Easy Cleaning
- Easy to load Polyethylene Inner Basket with Handle Grips
- Sturdy Polyethylene Shell totally sealed
- Dimensions:
  - Height: 33.5″
  - Diameter: 21″
- Shipping Weight: 49 lbs
- Gravity Drain: 1.5″ wide
- Inner Liner Capacity: 10 gal./10 lbs.
  - Height: 14″
  - Diameter: 13″
- ETL electrical and sanitation listed.
- NEMA # : 5-15P on 1+6′ cord
- 2 year parts warranty, 1 year labor.

Optional Accessories

- Wall mounting kit (PNC 653634)
- Inner Liner (PNC 653633)

Electrolux Professional, Inc.
www.electroluxusa.com/professional
3225 SW 42nd Street, Fort Lauderdale, Florida, 33312 • Telephone Number: 866-449-4200 • Fax Number: 954-327-6789

Electrolux DITO
Greens Machine Series
VSD-10 – 10 gal.Vegetable Dryer

Electrolux DITO

Greens Machine Series
VSD-10 – 10 gal.Vegetable Dryer

Front View

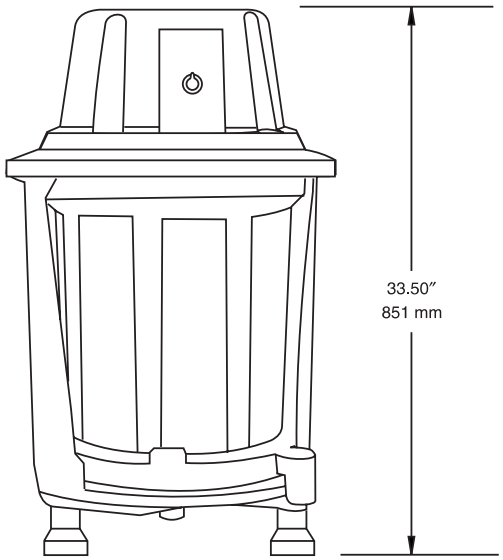

Top View

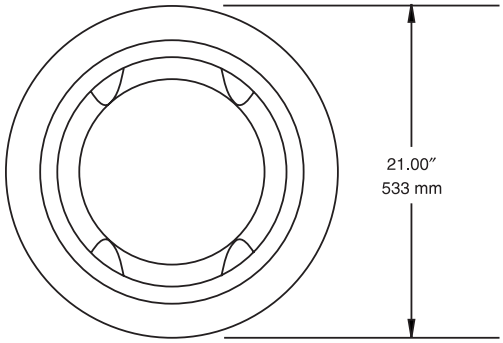

Side View

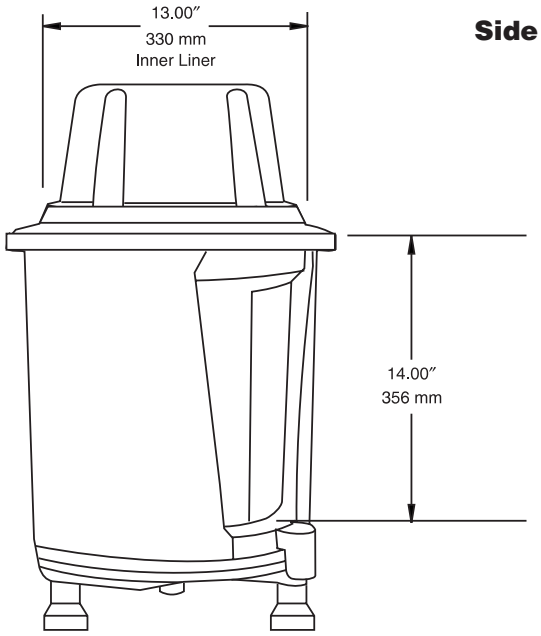

Electric

Supply voltage:

601563 (VSD-10)	115 V/1p/60Hz - 1.3A

The company reserves the right to make modifications to the products without prior notice. All information correct at time of printing.
9-5-06