Electrolux

ITEM # _____

MODEL # _____

PROJECT NAME # _____

SIS # _____

AIA # _____

Cast Iron Panini Grill Series
15″ Panini Grill

Cast Iron Panini Grill Series
15” Panini Grill

602104 (DGR15)	15″ Panini Grill, ribbed/ribbed 120 V/1p/60Hz
602105 (DGS15)	15″ Panini Grill, ribbed/smooth 120 V/1ph/60Hz
602106 (DGSS15)	15″ Panini Grill, smooth/smooth 120 V/1p/60Hz

Short Form Specification

Item No. _____

Unit to be Electrolux Dito 15″ Panini Grill. Electrical characteristics to be 120 V SINGLE-phase operation. Thanks to its small size, it is easy to handle and to position, offering as well a large 15″ cooking surface. It is available in two versions: plate L (smooth) and plate R (ribbed) and mixed surface.

5-20P

Approval: _____

Main features

- Available in 3 different versions:
  - top and bottom ribbed surface.
  - top and bottom smooth surface.
  - top ribbed surface and bottom smooth surface.
- Cast iron plates are covered by a vitreous enamel coating, making them scratch and rust proof and ensuring hygiene. They are acid and salt proof and resistant to oxidation.
- Stainless steel 430 construction
- Shock-proof heating elements 1.7 kW
- Mounted inside the plate for a perfect thermal conductivity
- Adjustable thermostat up to 570 °F
- Adjustable Timer built-in
- Self-balancing upper plate adjusts to different heights to halve cooking times and double performance.
- Made of Stainless steel AISI 430 and the cooking surface is made of a special cast iron treated with verified food enamel, this guarantees hygienic conditions and high resistance to acids, salts and oxidation processes.
- Dimensions: (H×L×W): 6.69″ × 10″ × 15″
- Approx. shipping weight—53 lbs
- ETL electrical and ETL sanitation listed. ETL Canada.
- NEMA # : 5-20P
- 2 year parts warranty, 1 year labor.
- Cooking Surface Dimensions: 10″ × 15″
- Top Plate shut-off switch standard.

Electrolux Professional, Inc.
www.electroluxusa.com/professional
3225 SW 42nd Street, Fort Lauderdale, Florida, 33312 • Telephone Number: 866-449-4200 • Fax Number: 954-327-6789

Electrolux
Cast Iron Panini Grill Series
15″ Panini Grill

Electrolux

Cast Iron Panini Grill Series
15″ Panini Grill

Front View

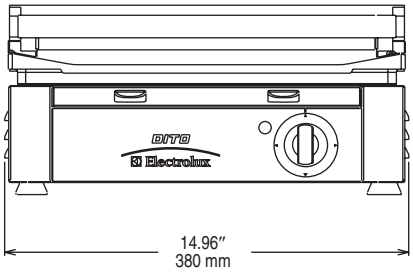

Top View

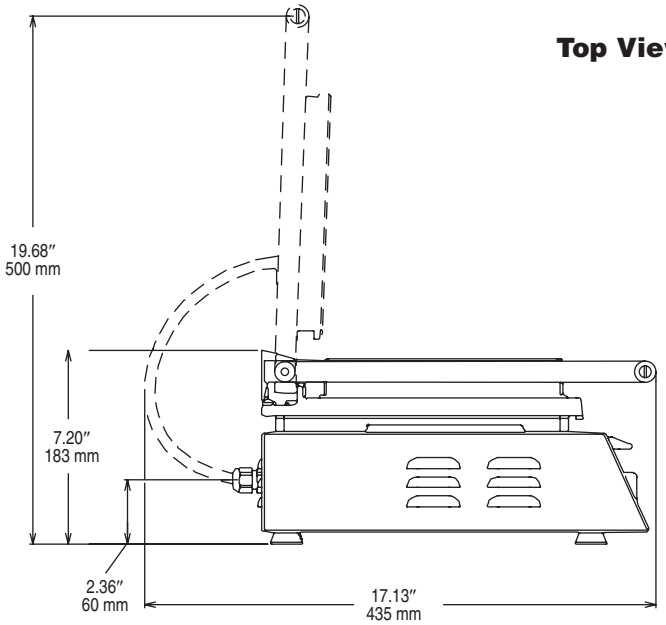

EC = Electrical connection

Side View

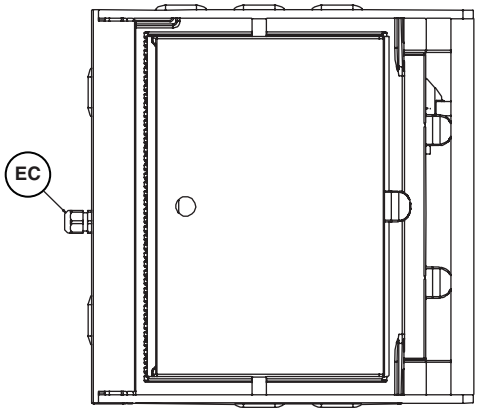

Electric

Supply voltage:

602104 (DGR15)	120 V/1p/60Hz – 20A
602105 (DGS15)	120 V/1p/60Hz – 20A
602106 (DGSS15)	120 V/1p/60Hz – 20A

Key Information

FIRST USE OF THE MACHINE

- When the machine is delivered, the steel surfaces are protected with a nylon anti-scratch film. This film has to be removed.
- The insulating materials used during the manufacturing and the residuals of grease due to the mechanical installation of single parts, heat and produce smoke, for this reason, **it is necessary to start the machine at maximum temperature for 15-20 minutes**.

GENERAL CLEANING

- Clean the Grill at least once a day and, if necessary more often.
- All the machine parts that are in contact with the product must be cleaned.
- Never clean the machine by means of compressed water or water jets.
- Cleaning can be performed when surface is hot, scrape with a metallic brush on the cooking grid several times.
- Empty the grease tray.
- It is advisable to perform these cleaning operations when the Grill temperature is at the minimum so that the residual grease that sticks to the grid can melt.
- Do not pour water or other liquids on the Grill when it is hot, because the changes of temperature can provoke their breaking.

The company reserves the right to make modifications to the products without prior notice. All information correct at time of printing.

10-28-08