Electrolux

DITO

Libero Line Series
Mini combi

ITEM # _____

MODEL # _____

PROJECT NAME # _____

SIS # _____

AIA # _____

Libero Line Series
Mini combi

260914 (OTS100) Mini combi - 110 V/1p/60Hz

Short Form Specification

Item No. _____

Unit shall be Electrolux Dito Mini Combi 260914 and shall feature: Steam, convection and mixed cooking modes. Accommodates 3-10″ x 12″, half sized steam pans in 5 rack positions. Plug & Cook, mobile tabletop appliance. 110 V single phase electric. Cord and NEMA 5-20 plug included. No water connection required. Self-contained water tank is an optional accessory.

NEMA #: 5-20P

Approval: _____

Main features

- Stainless steel oven cavity with rounded corners.
- Self contained with built-in fresh water/condense container and requires no water or drain connections.
- Delicate foods, such as fish, cook in the gentle heat of low temperature steam, retaining the full flavor and texture.
- Reheat chilled food in low temperature steam, without it drying out and losing its ''freshness''.
- Cooks vegetables in maximum steam, without loss of vitamins or flavor.
- Fan assisted air circulation enables convection cooking at a lower temperature with even results over the three oven shelves.
- Combining steam and convection heating produces a moist heat that reduces shrinkage whilst still browning meat.
- Side hangers, removable without use of tools, suitable for 3x1/2GN.
- Supplied with the following 1/2GN accessories: N. 3 Aluminum Baking Plates, N. 2 Stainless steel Perforated Containers, N. 2 Stainless steel Plain Containers and N. 3 Stainless steel Wire grids.
- Installed electric power: 1.8 kW
- Power
- Boiler 1.1 kW
- Cooking Chamber 0.575 kW
- External Dimensions:
  - Height 18.3″
  - Depth 21.4″
  - Width 13.75″
- ETL electrical and sanitation listed.
- NEMA # : 5-20P
- Shipping weight – 55 lbs.
- Net Weight – 49 lbs.
- 2 year parts warranty, 1 year labor.

Included Accessories:

- 2 Plain Containers
- 2 Perforated Containers
- 3 Baking Plates
- 3 Wire Grids

Optional Accessories

- External water tank kit (PNC 921184)

Electrolux Professional, Inc.
www.electroluxusa.com/professional
3225 SW 42nd Street, Fort Lauderdale, Florida, 33312 • Telephone Number: 866-449-4200 • Fax Number: 954-327-6789

Electrolux DITO
Libero Line Series Mini combi

Electrolux
DITO

Libero Line Series
Mini combi

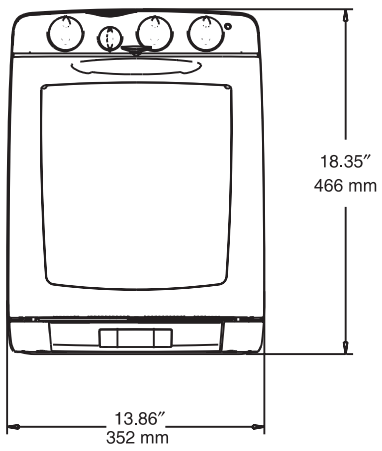

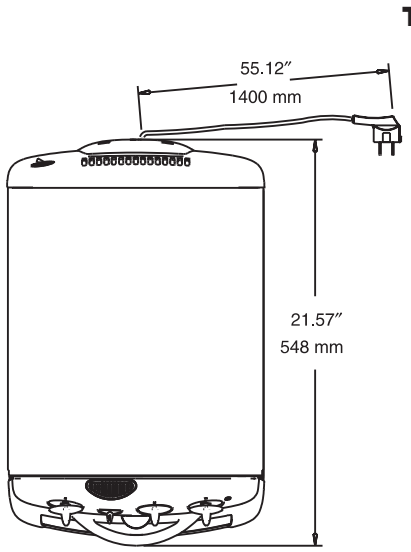

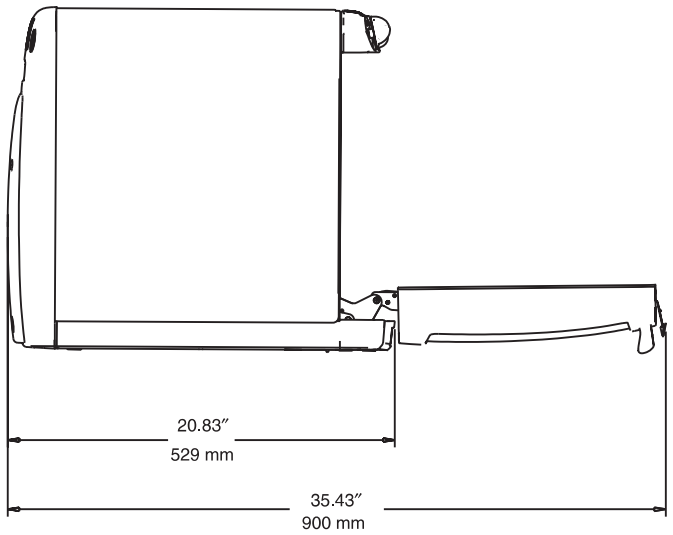

Electric

Supply voltage:

260914 (OTS100)	110 V/1p/60Hz - 16A

Key Information

Cooking functions

Max steam

The steam temperature is above 208 °F. This rapid method of cooking featuring all the necessary precautions is particularly suited to the majority of foodstuffs cooked in water. The foodstuffs conserve their vitamins as well as their shape and color. This method is used above all for vegetables and potatoes. The food can be cooked just as well in the plain containers as in the perforated containers.

Low steam

The steam temperature is about 185 °F. Low steam is a combination between high humidity and precise temperature control. This method protects the dishes while conserving their mineral salts and vitamins, as well as their taste, form and color. Low steam means slow even cooking. Foodstuff weight loss is kept to a minimum. This method of cooking is ideal for fish and pâtés, warming up meat dishes, and also for heating up “vacuum-packed” products.

Combi cooking

The combination of hot air and steam is an intelligent method of cooking. The higher humidity ensures delicate heating and a juicier roasting surface. The intensity of the hot air and the conducting of the heat through the steam seals the outside surface of the dishes more rapidly, trapping the moisture inside the roast and giving less weight loss.

Convection heat

This method is suitable for roasting. You can also use it to cook fillets of fish and meat, cutlets, pâtés, potato dishes, gratins, cakes and biscuits.

Cooling function

This function is meant to be used when you want to switch from one cooking process (Convection heat or Combi) to another one at a much lower temperature (Low and Max steam).When you select this function then only the fan will be on and not the heating elements. This will enable the oven cavity temperature to cool down rapidly to a suitable temperature for heat sensitive foods (vegetable or fish). Make sure the ventilation control is set to the fully open position. If you want to speed up this cooling process even more, leave the door open while this function is selected.

The company reserves the right to make modifications to the products without proir notice. All information correct at time of printing.
4-6-06