6982 S Quentin St
Centennial, CO 80112
Toll free: 888.733.3456
Main 303.539.8300
Fax: 303.539.8399
www.koalabear.com

COUNTERTOP SURFACE MOUNTED BABY CHANGING STATION

KB112-01CT

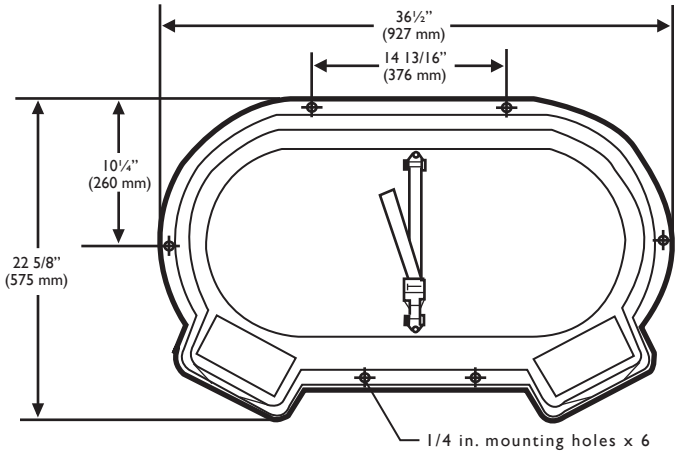

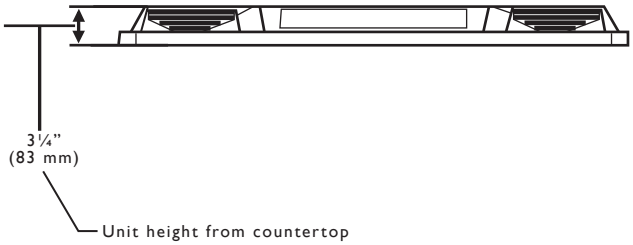

Continued...

© 2008 by Koala Kare Products, Form No. AB014 November 2008

MATERIALS:
FDA approved thermoformed high-density polyethylene. Mounting instructions and hardware included. Graphics and safety messages in six languages. Contoured changing surface area is 379.04 sq. in (244,541.45 sq. mm) comes complete with nylon safety straps.

OPERATION:
For use in restrooms where counter space is more abundant than wall space. High-density polyethylene has no sharp corners, is easy to clean and resists odors and bacterial growth.

Warning: *To ensure that the unit supports the intended loads, baby changing stations must be properly installed according to the manufacturer's instructions*

INSTALLATION:
To ensure proper installation and compliance with building codes, it is recommended that a qualified person or carpenter perform the installation of the unit.

Drilling holes and mounting the station:
1. Remove the station from the shipping container and check for any freight damage. Identify the best location for installing the baby changing station.
2. Place the countertop Baby Changing Station onto the counter surface and place into desired position. Using the countertop Baby Changing Station mounting holes as a guide, mark the screw hole locations with a pencil. Remove countertop Baby Changing Station and drill holes with a #21 or 5/32" (127 mm) drill bit. Drill down 1½" (32 mm) deep.
3. Apply a suitable water sealant, such as silicone, around the bottom edge of the changing station, then set unit onto the countertop using the mounting holes as a guide. Fasten unit to counter top with supplied screws.

Caution:
Drill carefully through ceramic tile and other hard counter top materials.

SPECIFICATION:
Baby changing station shall be durable, high impact polyethylene body. Design of unit shall be countertop surface mounted. Bed shall have smooth concave changing area with a nylon safety strap and universal instruction graphics. The unit shall be backed by a 5-year manufacturers limited warranty. Unit shall be manufactured in the U.S.A.

The illustrations and descriptions herein are applicable to production as of the date of this Technical Data Sheet.
The manufacturer reserves the right to, and does from time to time, make changes and improvements in designs and dimensions without notice.

Koala Kare Products
A Division of Bobrick
6982 S. Quentin Street
Centennial, CO 80112-3945
Main: 303.539.8300
Fax: 303.539.8399
Toll Free: 888.733.3456
www.koalabear.com

© 2008 by Koala Kare Products, Form No. AB014 November 2008