Item No. _____

Quantity _____

AIA File No. _____

NEMCO®
FOOD EQUIPMENT

Model No.
6700
6701
6703-240
6704-240

Counter Top Electric Fryers

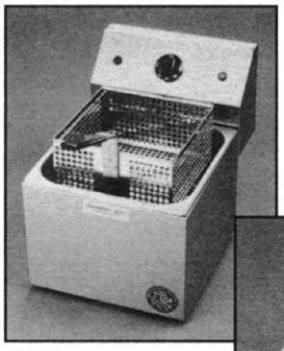

6700

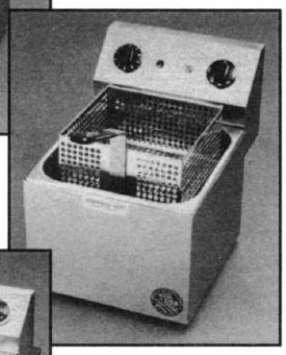

6701

6703-240

Small in size, big in operation! Nemco's counter top fryers just keep on producing. Compact models range in size from 10 to 15 lb. fat capacities. Convenient 10 lb. fryers are available in 120v for those special events that require a portable fryer. And our 15 lb. economy models 6703-240 and 6704-240 are just the right size for small operators who need maximum performance in minimal space. The 15 lb. models are designed with a 6000 watt element that takes only 10 minutes from initial heat up to reach a 375° F cooking temperature with quick recovery. The 6700 and 6701 can fry 10 lbs. of fries per hour; the 6703-240 and 6704-240 will fry 15 lbs. of fries per hour.

Special features include heavy duty baskets that are constructed of stainless steel with durable plastic coated handles for a cool touch. One bulk basket is standard on all models except the 6703-240 and 6704-240 which come with a set of twin baskets. Stainless steel batter plates are included to allow for frying without a basket. Control panel assembly is removable for ease of cleaning and convenient maintenance.

Standard Features:

- Brushed stainless steel construction-outside
- Adjustable bulb and capillary thermostat
- Heavy duty fry baskets with cool touch handles
- Removable control panel assembly
- Equipped with adjustable feet
- 15 minute manual bell timer on 6701 and 6703-240
- High-limit safety thermostats
- Temperature range of 200-400° Fahrenheit
- Indicator lights meet U.S. and International codes
- Single phase
- Six foot cord and plug provided
- One year parts and labor warranty

NEMCO Food Equipment, LTD.
301 Meuse Argonne
P.O. Box 305
Hicksville, OH 43526
Phone (419) 542-7751
FAX (419) 542-6690
www.nemcofoodequip.com

Printed 10/08 Printed in U.S.A.

Model No.
6700 6703-240
6701 6704-240

AIA File No.

6700

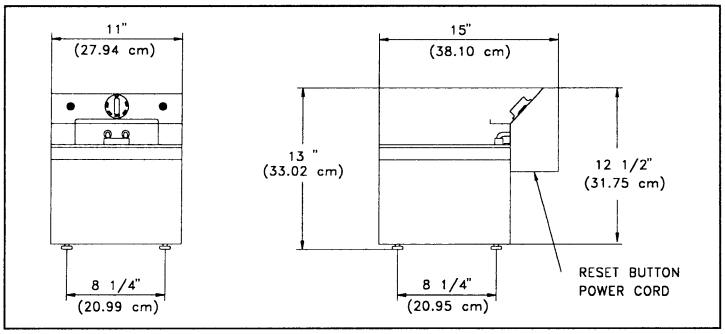

6701

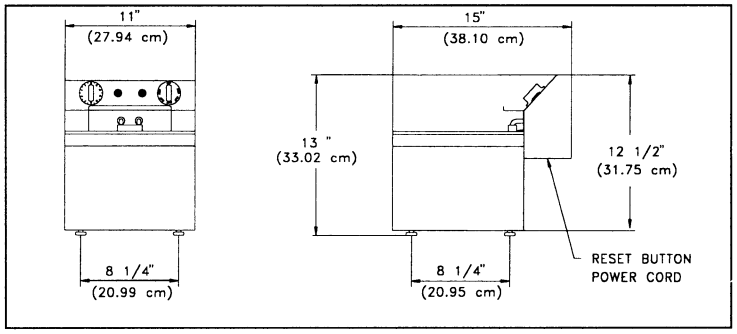

6703-240
6704-240

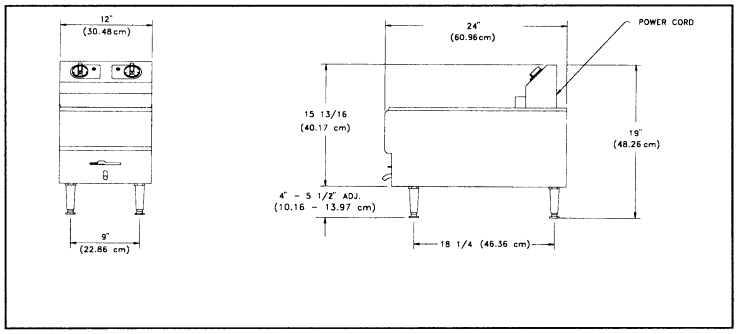

Specifications:

Model No.	Fat Capacity	Width Inches/(cm)	Depth Inches/(cm)	Height Inches/(cm)	Voltage	Rated Wattage	Nominal Amps	NEMA Configuration	Unit Weight lbs./(Kg)	Shipping Weight lbs./(Kg)
6700	10 lbs.	10 7/8 (27.6)	16 7/8 (42.9)	13.25 (33.7)	120	1800	15.0	5-15P plug	14.5 (6.6)	20 (9.1)
6701	10 lbs.	10 7/8 (27.6)	16 7/8 (42.9)	13.25 (33.7)	120	1800	15.0	5-15P plug	14.5 (6.6)	20 (9.1)
6703-240	15 lbs.	12 (30.5)	24 (61.0)	14 7/8 (37.8)	240	6000	25.0	10-30P plug	29.5 (13.4)	36 (16.1)
6704-240	15 lbs.	12 (30.5)	24 (61.0)	14 7/8 (37.8)	240	6000	25.0	10-30P plug	29.5 (13.4)	36 (16.1)

Note: The 6700 and 6701 will fry 10 lbs. of fries per hour; the 6703-240 and 6704-240 will fry 15 lbs. of fries per hour.

Accessories:

Model No.	Description
☐ 66786	Bulk Basket, 13"L x 7 5/8"W x 3 3/4"D (for 6703-240 & 6704-240)
☐ 66788	Set of Twin Baskets, 8"L x 4"W x 4"D (for 6703-240 & 6704-240)

Typical Specifications

Electric countertop fryers shall have a stainless steel body and heat well, and be equipped with an adjustable bulb and capillary thermostat and formed tubular heating element. The unit shall have a maximum heat setting of 375°F. The units shall operate on 120 volts and 240 volts and have a wattage of 1800 on 120 volts, and 6000 on 240 volts. A 6′ cord and plug shall be furnished for easy installation. Electric fryers shall carry the certification of ETL Testing Laboratories and shall be listed with the National Sanitation Foundation.

NEMCO FOOD EQUIPMENT
NEMCO Food Equipment, LTD.
301 Meuse Argonne, P.O. Box 305
Hicksville, OH 43526
Phone (419) 542-7751
FAX (419) 542-6690
www.nemcofoodequip.com

AUTOQUOTES