Unit Information

Limited 2 Year Warranty

Listing ***Current***-ETL ***Older***-UL

60Hz – 3.0 Amps

2 Speed Motor

Drive Coupling Easily Replaced on Site

WARING COMMERCIAL

BB150 - BB150S
plastic container - stainless steel container

BB150PT - BB150ST /Taiwan
plastic container - stainless steel container

BB15DP - BB15DS /Don
plastic container - stainless steel container

BB15DW /Don white base
(Marked for Deleation)

BB150RD - BB150SRDS /Rest Depot
plastic container - stainless steel container

BB15RP - BB15RS /Rykoff
(Discontinued)

BB15PC - BB15SC /Sysco
(Marked for Deleation)

BB160 - BB160S /chrome base
plastic container - stainless steel container

BC150P - BC150S /Canadian
plastic container - stainless steel container

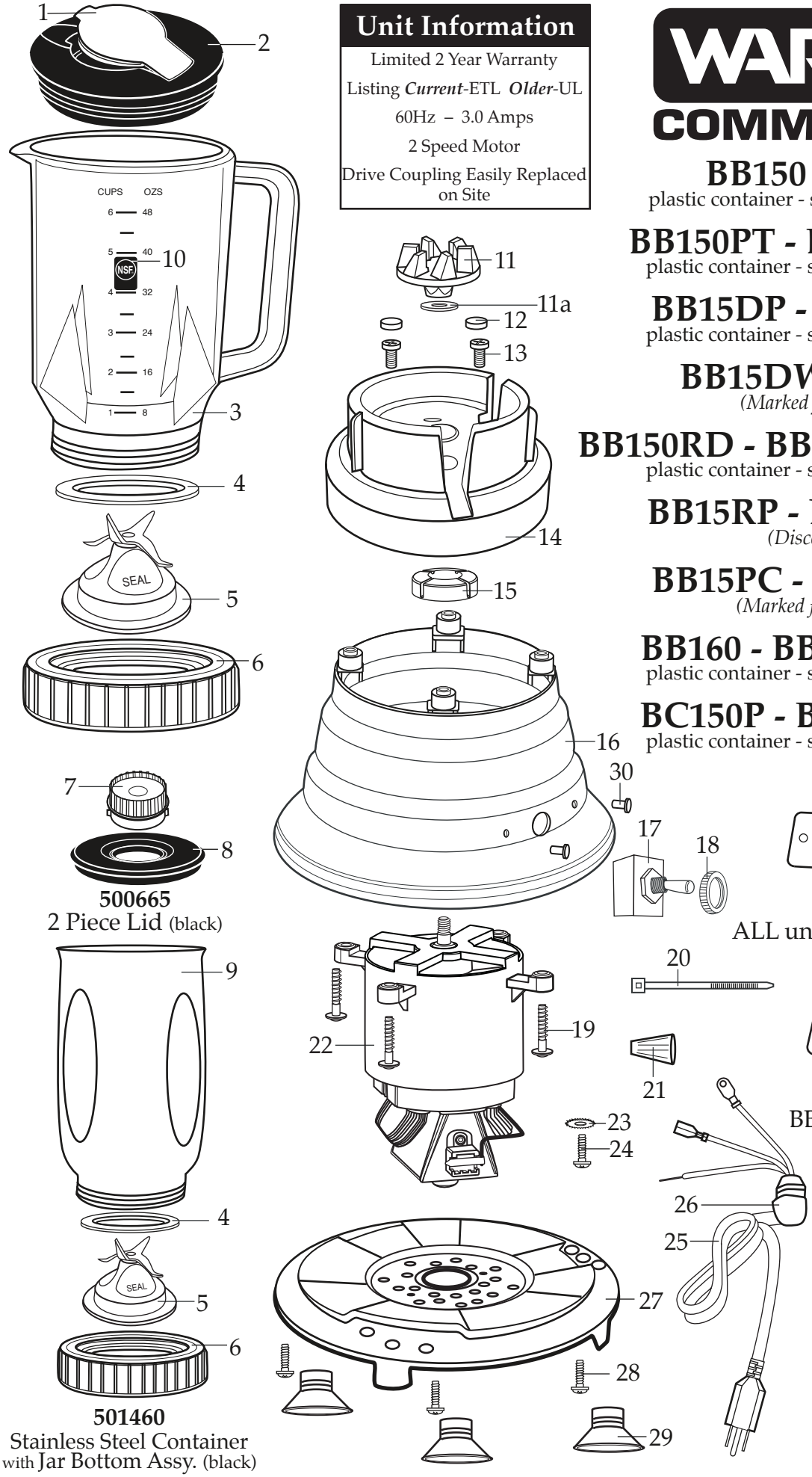

500665
2 Piece Lid (black)

501460
Stainless Steel Container
with Jar Bottom Assy. (black)

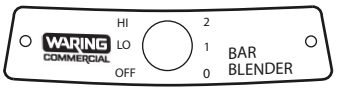

014899
Name Plate
ALL units EXCEPT Don & Sysco

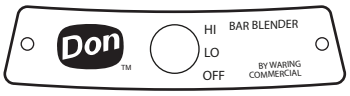

018139
Name Plate
BB15DP, BB15DS, BB15DW

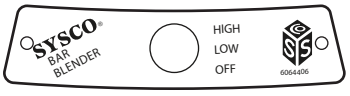

023257
Name Plate
BB15PC, BB15SC

Catalog	Older Model	2nd Generation Model	Current Model
BB150 - BB150RD	36BL93	51BL13	WF1112217
BB150S - BB150SRDS	36BL70	51BL10	WF1112219
BB150PT - BB150ST		BB150*T	
BB15DP	37BL30	51BL14	WF1112217
BB15DS	37BL31	51BL11	WF1112219
BB15DW	39BL21	51BL15	
BB15RP - BB15RS	47BL10		
BB15PC - BB15SC	38BL36	51BL12	
BB160	39BL67	51BL35	WF1112217
BB160S		BB160S	WF1112219
BC150P - BC150S	36BL82	BC150*	WF1111217 - WF1111219

Waring Factory Service Center
314 Ella T. Grasso Ave.
Torrington, CT 06790
Tele. 1-800-269-6640
Fax 860-496-9017
www.waringproducts.com

Illustration#	Part#	Description
1	018534	Lid Insert
2	024367-09	Outer Lid /black
	018532	Outer Lid /white
3	018531	Jar /plastic 48 oz.
4	006890	Gasket
5	502508	Blending Assy.
6	015388-09	Jar Bottom /black
	015388-01	Jar Bottom /white
7	011700	Center Lid
8	013443	Outer Lid
9	024661	Jar /stainless steel 32 oz.
10	013304	NSF Seal /ALL units EXCEPT Taiwan units
11	014009	Coupling
11a	003609	Washer *(current production)*
12	016094	Hole Plug 2 Req.'d
13	013768	Screw 2 Req.'d
14	017381-09-H	Jar Adapter /black
	017381-01	Jar Adapter /white
	019605	Jar Adapter /white *(older units)*
15	030171	Housing Seal *(current production)*
	018605	Housing Seal *(2nd generation & older units)*
16	030218-09W	Base /black *(current production)*
	019608-09W	Base /black *(2nd generation & older units)*
	019608-01	Base /white *(2nd generation)*
	019602	Base /white *(older units)*
	030217	Base /chrome *(current production)*
	016313	Base /chrome *(2nd generation & older units)*
17	029355	Switch *(current production)*
	026800	Switch *(2nd generationn)*
	012698	Switch *(older units)*
18	015098	Nut Ring
19	030170	Shoulder Screw & Washer 4 Req.'d *(current production)*
	024595	Screw & Washer 4 Req.'d *(2nd generationn)*
	001832	Screw 4 Req.'d *(older units)*
	015383	Washer 4 Req.'d with 001832 - screw *(older units)*

Catalog	Older Model	2nd Generation Model	Current Model
BB150 - BB150RD	36BL93	51BL13	WF1112217
BB150S - BB150SRDS	36BL70	51BL10	WF1112219
BB150PT - BB150ST		BB150*T	
BB15DP	37BL30	51BL14	WF1112217
BB15DS	37BL31	51BL11	WF1112219
BB15DW	39BL21	51BL15	
BB15RP - BB15RS	47BL10		
BB15PC - BB15SC	38BL36	51BL12	
BB160	39BL67	51BL35	WF1112217
BB160S		BB160S	WF1112219
BC150P - BC150S	36BL82	BC150*	WF1111217 - WF1111219

Waring Factory Service Center
314 Ella T. Grasso Ave.
Torrington, CT 06790
Tele. 1-800-269-6640
Fax 860-496-9017
www.waringproducts.com

Illustration#	Part#	Description
20	013731	Cable Tie 2 Req.'d
21	009051	Wire Nut 1 Req.'d *(current production & 2nd generation)*
		2 Req.'d *(older units)*
		5 Req.'d / Taiwan units
	012409	Crimp Connector 2 Req.'d / Canadian units
22	027255	Motor / zinc cast – ETL listing *(current production)*
	024488	Motor / sheet metal – UL listing *(2nd generation & older units)*
23	002943	Lock Washer
24	027278	Screw *(current production)*
	013659	Sem *(2nd generation)*
	015383	Washer *(older units)* 4 Req.'d
	001832	Screw *(older units)* 4 Req.'d
25	501162	Cord Set ALL units EXCEPT ones listed below
	003565	Cord Set / Taiwan & Canadian *(current production & 2nd generation)*
	500830	Cord Set / *(older)* Taiwan and *(older)* Canadian units
26	016041	Strain Relief / ALL units EXCEPT Canadian units
27	024055-H	Bottom Plate ONLY / ALL units EXCEPT ones listed below
	024055-R	Bottom Plate / Taiwan
	502692	Bottom Plate Assy. with Cord Set / Canadian units
	502747	Bottom Plate Assy. NO Cord Set / Canadian units
	501733	Bottom Plate Assy. / *(older)* Canadian units
28	013659	Sem 3 Req.'d
	003569	Screw 3 Req.'d / Canadian units
29	026278	Suction Cup Foot 3 Req.'d
	002891	Foot 3 Req.'d / Canadian units
30	003532	Rivet 2 Req.'d
31	014553	Cable Clamp / Canadian units
32	007558	Screw / Canadian units
33	012369	Kep Nut / Canadian units

BB150PT-BB150ST Items

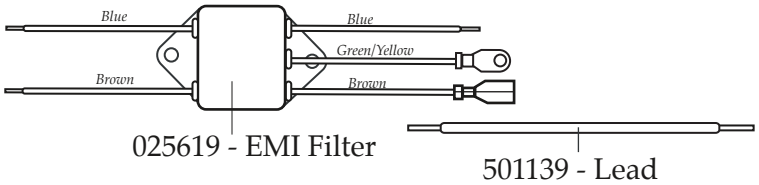

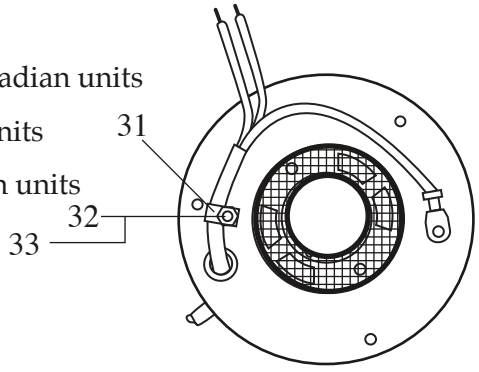

502962
Bottom Plate Assy. Canadian Units

Catalog	Older Model	2nd Generation Model	Current Model
BB150 - BB150RD	36BL93	51BL13	WF1112217
BB150S - BB150SRDS	36BL70	51BL10	WF1112219
BB150PT - BB150ST		BB150*T	
BB15DP	37BL30	51BL14	WF1112217
BB15DS	37BL31	51BL11	WF1112219
BB15DW	39BL21	51BL15	
BB15RP - BB15RS	47BL10		
BB15PC - BB15SC	38BL36	51BL12	
BB160	39BL67	51BL35	WF1112217
BB160S		BB160S	WF1112219
BC150P - BC150S	36BL82	BC150*	WF1111217 - WF1111219

Waring Factory Service Center
314 Ella T. Grasso Ave.
Torrington, CT 06790
Tele. 1-800-269-6640
Fax 860-496-9017
www.waringproducts.com

BC150P-BC150S Items

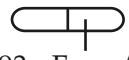

502693 - Fuse Assy. /*(current production)*

Not Shown

501400 - Lead /*(older units)* use 2 wire nuts
502512 - Lead & Diode/(003262) *(older units)* that use 2 wire nuts
500916 - Lead & Diode (003262) /*(older units)* not shown
002943 - Washer 2 Req.'d /screen *(older units)*
002881 - Kep Nut 2 Req.'d /ground lead *(older units)*
501512 - Lead/*(older units)*
014312 - Screen /*(older units)*

502507 - Cutter & Shaft
017832 - Bearing Cap
500122 - Bearing Holder
006937 - Washer
003138 - Coupling

Parts for the 502508 Blending Assy.

(that can be purchased separately)

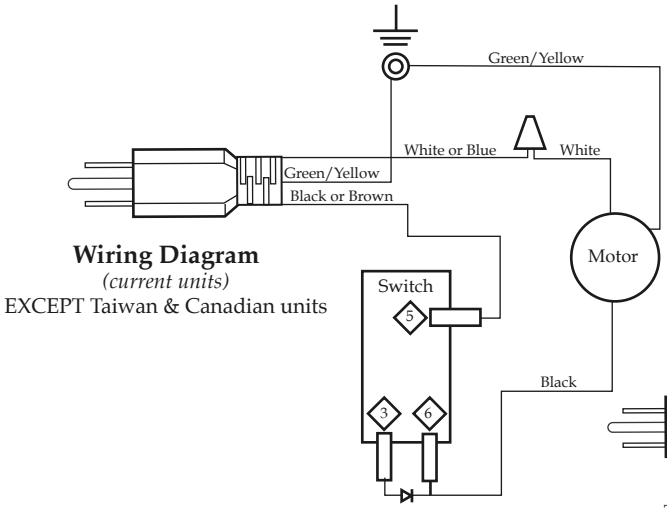

Wiring Diagram
(current units)
EXCEPT Taiwan & Canadian units

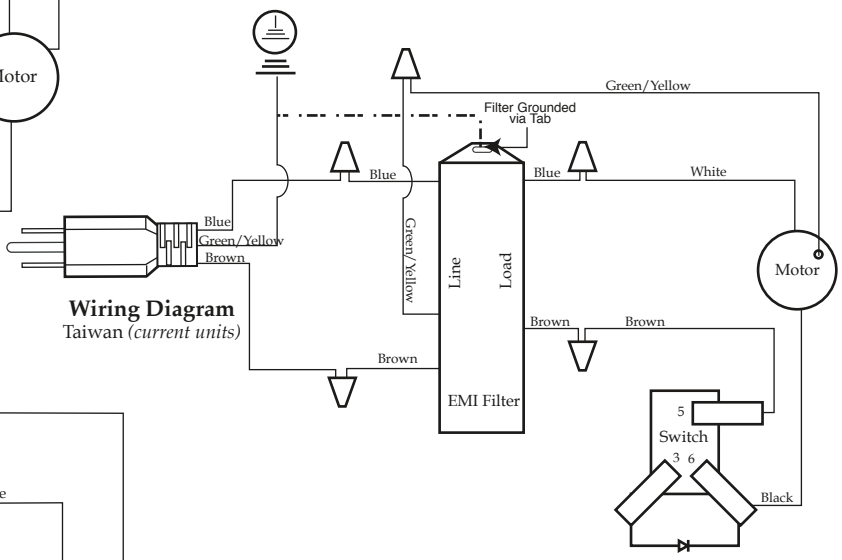

Wiring Diagram
Taiwan *(current units)*

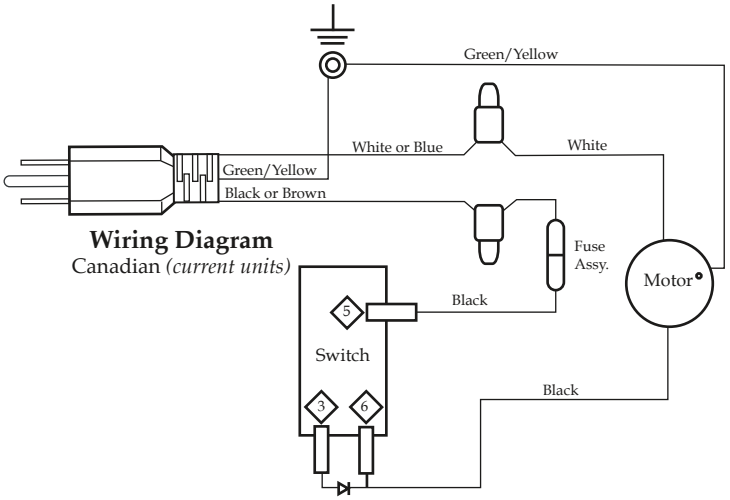

Wiring Diagram
Canadian *(current units)*

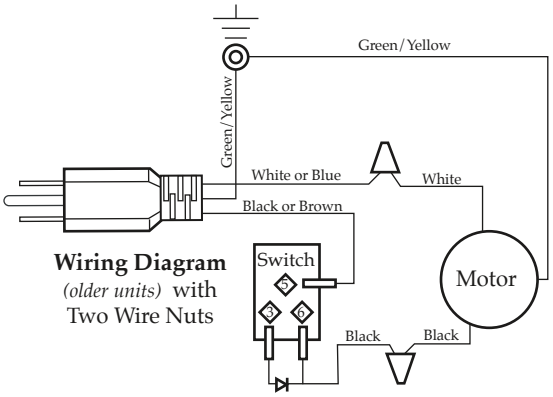

Wiring Diagram
(older units) with
Two Wire Nuts