Scotsman

PRODIGY smart thinking

F0522 – 500 lb Flake Ice Machine

Prodigy® Flake Ice Machine

PRELIMINARY

Shown on B322S bin with optional KLP8S legs.

Features

AutoAlert™ indicator lights constantly communicate about operating status and actually signal your staff when it's time to descale, sanitize and more - making upkeep practically foolproof.

Preventative maintenance is simplier than ever with easily-removed panels allowing clear access to internal components and a diagnostic code display insuring the right fix the first time. Reusable air filter is easily removable from the outside.

Flake ice is ideal for keeping salad bar fruits and veggies crisp and appealing and soft drink displays icy cold.

An optional advanced feature Smart-Board™ provides NAFEM data protocol and additional operational data that can be displayed on-screen or transmitted remotely, resulting in early alert and fast diagnosis of operating issues.

An optional Vari-Smart™ ultrasonic ice level control sensor allows you the flexibility to program ice levels, for up to 7 days, keeping just the right amount of freshly made ice in the bin.

Industry leading 3 year parts and labor warranty

24 Hour Volume Production

Air Cooled		
70˚F/21˚C 50˚F/10˚C lb/kg	Air Water	90˚F/32˚C 70˚F/21˚C lb/kg
450/205		320/145

Water Cooled		
70˚F/21˚C 50˚F/10˚C lb/kg	Air Water	90˚F/32˚C 70˚F/21˚C lb/kg
530/240		420/191

c UL us

NSF

NAFEM DATA PROTOCOL COMPLIANT

CERTIFIED ISO 9001:2000

agion Nature's antimicrobial

Modular Bin Options

Model Number	Dimensions W" x D" x H"	AHRI Certified Bin Capacity lb/kg	Application Capacity lb/kg	Finish	Ship Weight lb/kg
B222S	22 x 34 x 31**	190/86	242/110	SS	120/55
B322S	22 x 34 x 44**	290/132	370/168	SS	140/84
B330P*	30 x 34 x 31**	270/123	344/156	Poly	90/41
B530P*	30 x 34 x 44**	420/191	536/244	Poly	110/50
B530S*	30 x 34 x 44**	420/191	536/244	SS	150/68
B842S*	42 x 34 x 44**	610/277	778/353	SS	185/84

*Contact Scotsman for bin top requirements. ** Add 6" H for bin legs.

Bin: B530S

Bin: B842S

Flake Ice

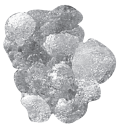

Cools more quickly than other ice forms. Ideal for seafood and produce displays

Warranty

- 3 years parts and labor on all components.
- 5 years parts on the compressor.

Warranty valid in North, South & Central America. Contact factory for warranty in other regions.

Scotsman Ice Systems
775 Corporate Woods Parkway
Vernon Hills, IL 60061

1-800-SCOTSMAN
Fax: 847-913-9844
E-mail: customer.service@scotsman-ice.com

www.scotsman-ice.com

F0522 – 500 lb Flake Ice Machine

Scotsman®

The smart choice in ice.™

F0522 – 500 lb Flake Ice Machine

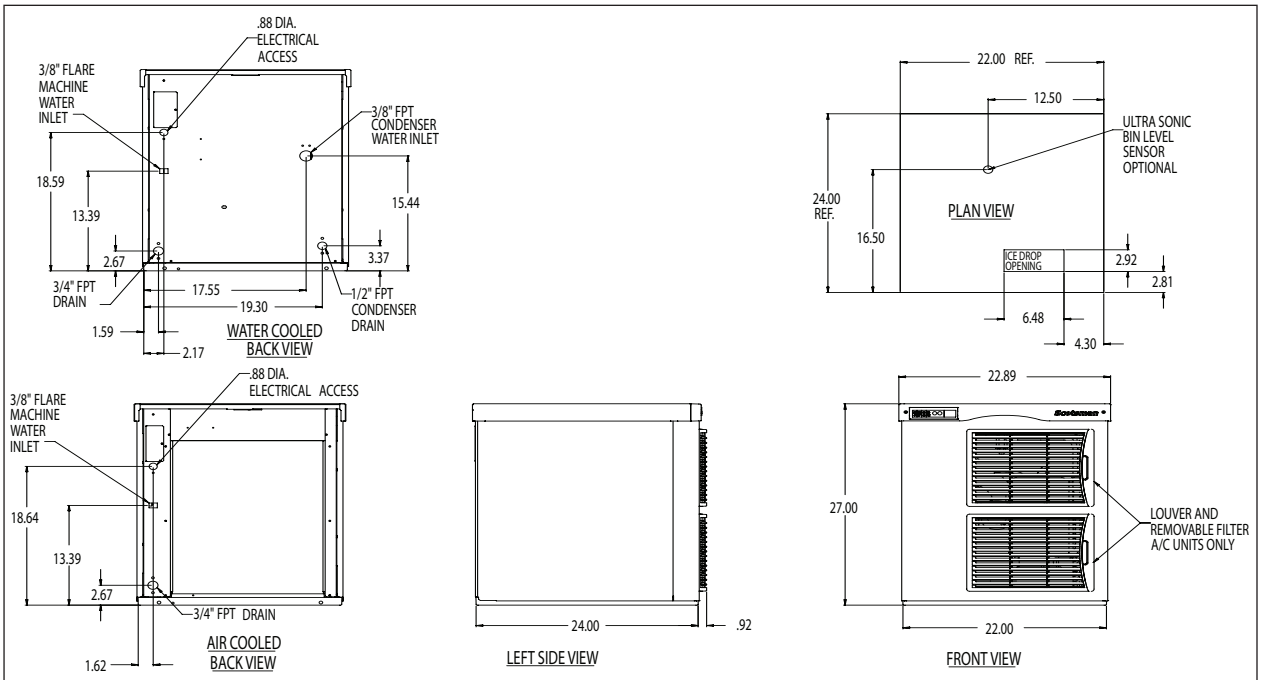

Specifications

Model Number	Condenser Unit	Basic Electrical Volts/Hz/Phase	Max. Fuse Size (amps)	Circuit Wires	Min. Circuit Ampacity	Energy Consumption kWh/100 lb (45.4 kg) 90˚F(32˚C)/70˚F(21˚C)	Water Usage Gallons/100 lb (liters/45.4 kg) Potable 90˚F(32˚C)/ 70˚F(21˚C)	Water Usage Gallons/100 lb (liters/45.4 kg) Condenser 90˚F(32˚C)/ 70˚F(21˚C)
F0522A-1A	Air	115/60/1	20	2	15.2	6.1	12.0/45.5	-
F0522W-1A	Water	115/60/1	20	2	14.4	3.9	12.0/45.5	82/310.73

All Models

Dimensions (W x D x H):

Unit:
22" x 24" x 23"
(55.9 x 61.0 x 58.4 cm)

Shipping Carton:
25.5" x 27.5" x 28.5"
(64.8 x 69.9 x 72.4 cm)

Shipping Weight:
173 lb/78 kg

BTUs per hour:
2,900

Refrigerant:
R-404A

Accessories

Model Number	Description
KVS	Vari-Smart™ Ice Level Control - Program ice bin levels to match ice needs.
KSBU	Smart-Board™ Advanced Control - Use additional operational data for fast diagnosis.
KSBU-N	Smart-Board™ Advanced Control with Network - Network capable.
KPFSA223	Side Air Flow Kit for 23" Tall Prodigy Flaker and Nugget

* Scotsman recommends all ice machines have water filtration. See Scotsman Sanitation Matrix for details.

Operating Requirements

	Minimum	Maximum
Air Temperatures	50°F (10°C)	100°F (38°C)
Water Temperatures	40°F (4.4°C)	100°F (38°C)
Remote Cond. Temps	-20°F (-29°C)	120°F (49°C)
Water Pressures	20 PSIG (1.4 bar)	120 PSIG (8.3 bar)
Electrical Voltage	-5%	+10%

Specifications and design are subject to change without notice.

Scotsman Ice Systems
775 Corporate Woods Parkway
Vernon Hills, IL 60061

1-800-SCOTSMAN
Fax: 847-913-9844
E-mail: customer.service@scotsman-ice.com

www.scotsman-ice.com

© 2009 Scotsman Ice Systems.

SIS-SS-PRD-F0522
8-09