Scotsman

PRODIGY smart thinking

F1222 – 1200 lb Flake Ice Machine

F1222 – 1200 lb Flake Ice Machine

Prodigy® Flake Ice Machine

PRELIMINARY

Shown on B948S bin with optional KLP8S legs.

Features

AutoAlert™ indicator lights constantly communicate about operating status and actually signal your staff when it's time to descale, sanitize and more - making upkeep practically foolproof.

Preventative maintenance is simplier than ever with easily-removed panels allowing clear access to internal components and a diagnostic code display insuring the right fix the first time. Reusable air filter is easily removable from the outside.

Flake ice is ideal for keeping salad bar fruits and veggies crisp and appealing and soft drink displays icy cold.

Maximize capacity by placing 2 units next to each other side by side on 48" bin, bringing ice production levels up to 2480 lbs. per 24 hours.

An optional advanced feature Smart-Board™ provides NAFEM data protocol and additional operational data that can be displayed on-screen or transmitted remotely, resulting in early alert and fast diagnosis of operating issues.

An optional Vari-Smart™ ultrasonic ice level control sensor allows you the flexibility to program ice levels, for up to 7 days, keeping just the right amount of freshly made ice in the bin.

Industry leading 3 year parts and labor warranty

24 Hour Volume Production

Air Cooled			Remote Cooled			Water Cooled		
70°F/21°C 50°F/10°C lb/kg	Air Water	90°F/32°C 70°F/21°C lb/kg	70°F/21°C 50°F/10°C lb/kg	Air Water	90°F/32°C 70°F/21°C lb/kg	70°F/21°C 50°F/10°C lb/kg	Air Water	90°F/32°C 70°F/21°C lb/kg
1100/499		825/374	1250/567		1000/454	1240/562		1040/472

Modular Bin Options

Model Number	Dimensions W" x D" x H"	AHRI Certified Bin Capacity lb/kg	Application Capacity lb/kg	Finish	Ship Weight lb/kg
B948S*	48 x 34 x 44**	700/319	893/406	SS	220/100
BH1100BB	48 x 34 x 50**	860/390	1100/499	SS w/GBB***	280/127
BH1100SS	48 x 34 x 50**	860/390	1100/499	SS	280/127
BH1300BB	60 x 34 x 50**	1100/499	1400/635	SS w/GBB***	310/140
BH1300SS	60 x 34 x 50**	1100/499	1400/635	SS	310/140
BH1600BB	60 x 34 x 62**	1755/796	1375/624	SS w/GBB***	370/168
BH1600SS	60 x 34 x 62**	1755/796	1375/624	SS	370/168

*Contact Scotsman for bin top requirements. **Add 6" H for bin legs. *** Stainless Steel with Galvanized Back & Bottom.

c UL us

NSF

NAFEM DATA PROTOCOL COMPLIANT

CERTIFIED ISO 9001:2000

agion Nature's antimicrobial

F1222 shown side by side on B948S bin

Flake Ice

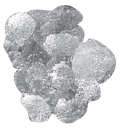

Cools more quickly than other ice forms. Used in produce and fish displays.

Warranty

- 3 years parts and labor on all components.
- 5 years parts on the compressor.

Warranty valid in North, South & Central America. Contact factory for warranty in other regions.

Scotsman Ice Systems
775 Corporate Woods Parkway
Vernon Hills, IL 60061

1-800-SCOTSMAN
Fax: 847-913-9844
E-mail: customer.service@scotsman-ice.com

www.scotsman-ice.com

Scotsman®

The smart choice in ice.™

F1222 – 1200 lb Flake Ice Machine

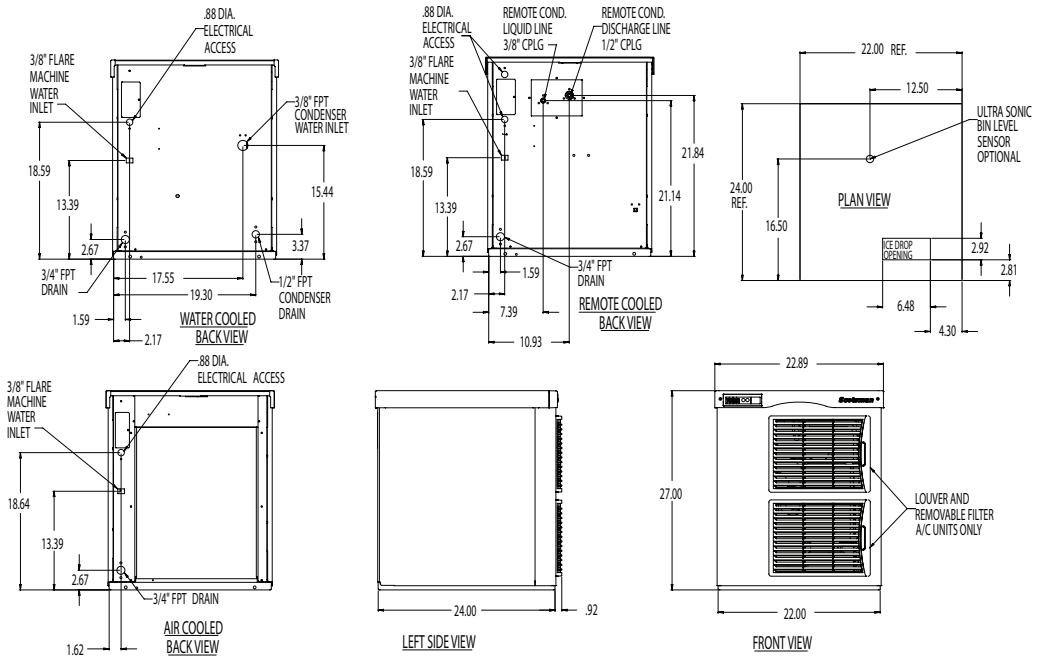

Specifications

Model Number	Condenser Unit	Basic Electrical Volts/Hz/Phase	Max. Fuse Size (amps)	Circuit Wires	Min. Circuit Ampacity	Energy Consumption kWh/100 lb (45.4 kg) 90˚F(32˚C)/70˚F(21˚C)	Water Usage Gallons/100 lb (liters/45.4 kg) Potable 90˚F(32˚C)/ 70˚F(21˚C)	Condenser 90˚F(32˚C)/ 70˚F(21˚C)
F1222A-32A	Air	208-230/60/1	15	2	12.2	3.9	12.0/45.5	-
F1222R-32A	Remote	208-230/60/1	15	2	12.0	3.4	12.0/45.5	-
F1222W-32A	Water	208-230/60/1	15	2	11.0	3.1	12.0/45.5	105/397.5
F1222A-3A	Air	208-230/60/3	15	3	13.0	3.9	12.0/45.5	-
F1222R-3A	Remote	208-230/60/3	15	3	12.8	3.4	12.0/45.5	-
F1222W-3A	Water	208-230/60/3	15	3	11.8	3.1	12.0/45.5	105/397.5

All Models

Dimensions (W x D x H):

Unit: **Individual**
22" x 24" x 27"
(55.9 x 61.0 x 68.6 cm)

Side by Side
44" x 24" x 27"
(111.8 x 61.0 x 68.6 xm)

Shipping Carton:
25.5" x 27.5" x 32.5"
(64.8 x 69.9 x 82.6 cm)

Shipping Weight:
220 lb/100 kg

BTUs per hour:
9,800

Refrigerant:
R-404A

Accessories

Model Number	Description
KVS	Vari-Smart™ Ice Level Control - Program ice bin levels to match ice needs.
KSBU	Smart-Board™ Advanced Control - Use additional operational data for fast diagnosis.
KSBU-N	Smart-Board™ Advanced Control with Network - Network capable.
KPFS227	Side Air Flow Kit for 27" Tall Prodigy Flaker and Nugget
ERC311-32A	Remote Condenser for F1222, 208-230/60/1 - Consult Remote Condenser Spec Sheet for details.
RTE10	Line set, Precharged, R-404A, 10ft.
RTE25	Line set, Precharged, R-404A, 25ft.
RTE40	Line set, Precharged, R-404A, 40ft.
RTE75	Line set, Precharged, R-404A, 75ft.

* Scotsman recommends all ice machines have water filtration. See Scotsman Sanitation Matrix for details.

Operating Requirements

	Minimum	Maximum
Air Temperatures	50°F (10°C)	100°F (38°C)
Water Temperatures	40°F (4.4°C)	100°F (38°C)
Remote Cond. Temps	-20°F (-29°C)	120°F (49°C)
Water Pressures	20 PSIG (1.4 bar)	120 PSIG (8.3 bar)
Electrical Voltage	-5%	+10%

Specifications and design are subject to change without notice.

Scotsman Ice Systems
775 Corporate Woods Parkway
Vernon Hills, IL 60061

1-800-SCOTSMAN
Fax: 847-913-9844
E-mail: customer.service@scotsman-ice.com

www.scotsman-ice.com

© 2009 Scotsman Ice Systems.

SIS-SS-PRD-F1222
8-09