Ice-O-Matic®

ICE0806/0805 - Cube Ice Maker

ICE0806 on B55

Features

- Space saving 26" (660 mm) tall design.
- Produces up to 962 lbs (436 kg) of ice per day.
- *Harvest Assist* provides consistent ice production for the life of the ice maker while reducing energy consumption and increasing capacity.
- *Pure Ice®* exclusively by Ice-O-Matic. Built-in antimicrobial protection for the life of the ice maker inhibits bacteria growth on ice maker surfaces. Ice-O-Matic's optional water filtration system provides protection against unpleasant tastes, odors and scale formation.
- Durable, electroless nickel plating on all evaporator plates ensures reliability.
- *Longest warranty in the industry.* Purchase an Ice-O-Matic water filter with your cube ice maker, replace the filter every six months, and the evaporator warranty is extended to 7 years parts and labor *(available in the U.S. and Canada only)*.
- Constructed from corrosion-resistant stainless steel and fingerprint-proof plastic.

Options & Accessories

Water Filters			
Ice Machine Model	Manifold		Inline
	System	Replacement	System
ICE0806	IFQ1	IOMQ (1)	N/A
ICE0805	IFQ1	IOMQ (1)	N/A

Ice Maker Warranty

Every Ice-O-Matic ice maker is backed by a warranty that provides both parts and labor coverage.

- Three years **Parts** and **Labor**.
- Five years **Parts** coverage on the evaporator and compressor.
- Seven years **Parts** and **Labor** on the evaporator when you purchase an Ice-O-Matic water filter with your cube ice maker and replace the filter every six months *(available in the U.S. and Canada only)*.

Ice Form

Full Cube	
W x D x H (in)	⅞ x ⅞ x ⅞
W x D x H (mm)	22 x 22 x 22

Half Cube	
W x D x H (in)	⅞ x ⅞ x ⅜
W x D x H (mm)	22 x 22 x 10

Bin Chart

Kits for Combining Wider Bins with Smaller Models

	Ice Storage Bins								
	Model No. Capacity Width	B25 255 lbs (116 kg) 30 in (762 mm).	B40 365 lbs (165 kg) 30 in (762 mm)	B42 374 lbs (170 kg) 22 in (559 mm)	B55 556 lbs (252 kg) 30 in (762 mm)	B100 927 lbs (420 kg) 48 in (1219 mm)	B120 1193 lbs (541 kg) 48 in (1219 mm)	B150 1499 lbs (679 kg) 60 in (1524 mm)	B170 1866 lbs (846 kg) 60 in (1524 mm)
Kits	ICE0805	Kit not required	Kit not required	N/A	Kit not required	KBT 5	Filler Kit Required	Filler Kit Required	Filler Kit Required
Kits	ICE0806	Kit not required	Kit not required	N/A	Kit not required	KBT 5	Filler Kit Required	Filler Kit Required	Filler Kit Require d

** See Ice-O-Matic Price List for Adapter Kits to combine ice makers with most available ice/beverage dispensers.*

ISO 9001 Certified

ASK ABOUT ENERGY STAR

Nature's antimicrobial

11100 E. 45th Avenue
Denver, CO 80239

Phone: 1. 866. PURE. ICE
Fax: 303. 371. 6296
www.iceomatic.com

Rev: A-02/09
Part: 1010

ICE0806/0805 Cube Ice Maker

Ice-O-Matic®

ICE0806/0805 Cube Ice Maker

Air Cooled

Please note: air-cooled units require 6" (152 mm) clearance for air intake and exhaust.

A. Ice maker potable water in, ⅜" FPT.
B. Ice maker water out, ¾" FPT.
C. Hole for electrical connections, ⅞".
D. Electrical connection junction box.

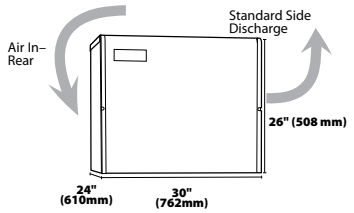

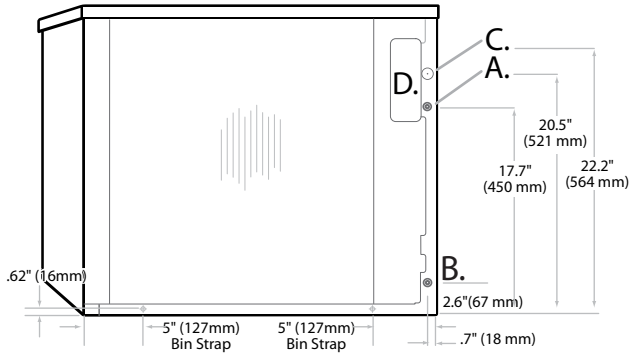

Air Cooled

Water Cooled/Remote

A. Ice maker potable water in, ⅜" FPT.
B. Ice maker water out, ¾" FPT.
C. Hole for electrical connections, ⅞".
D. Condenser water in, ⅜" FPT *(water only)*.
E. Condenser water out, ½" FPT *(water only)*.
F. Liquid line, ⅜" male quick connect coupling for precharged line set *(remote only)*.
G. Discharge line, ½" male quick connect coupling for precharged line set *(remote only)*.
H. Hole for remote electrical connections, ⅞" *(remote only)*.

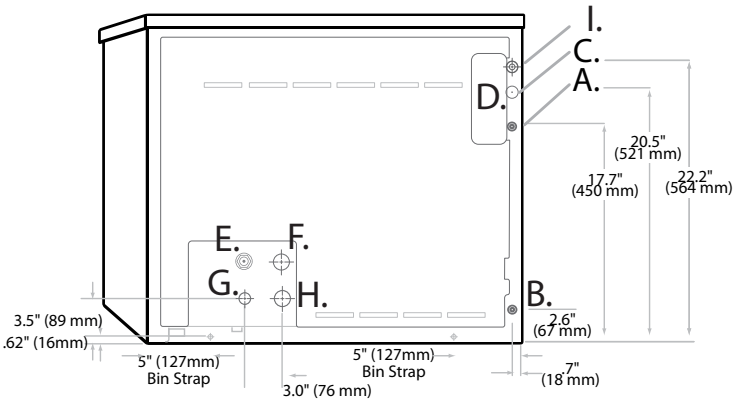

Water Cooled & Remote

Operating Requirements

	Minimum	Maximum	
		60 Hz	50Hz
Ambient Temp. Range Air	50˚F (10˚C)	100˚F (38˚C)	110˚F (43˚C)
Water Temp.	40˚F (4.4˚C)	100˚F (38˚C)	110˚F (43˚C)
Water Pressure	20 PSIG (1.4 BAR)	60 PSIG (4.1 BAR)	

Dimensions

All Models	
W x D x H (inches)	30 x 24 x 26
W x D x H (mm)	762 x 610 x 508

Specifications

Model Number	Cond. Unit	Ice Production per 24hrs		Water Usage gallons per 100 lbs of Ice 90°F air/70°F water		kWH Used per 100 lbs of ice @ 90°F air/ 70°F water	Voltage Characteristics	Min. Circuit Ampacity	Fuse Size	Approx. BTUs per hour
		70°F air/ 50°F water lbs (kg)	90°F air/ 70°F water lbs (kg)	Potable	Condenser					
ICE0806A	Air	897 (408)	666 (303)	22.0	-	5.8	208-230/60/1	13.2	20	13,806
ICE0806R ★	Remote*	913 (414)	768 (348)	21.5	-	5.3	208-230/60/1	14.7	20	15,205
ICE0806W	Water	898 (408)	784 (356)	23.1	112	4.5	208-230/60/1	9.8	20	14,355
ICE0805A	Air	892 (405)	648 (295)	21.1	-	4.5	230/50/1	11.7	16	11,865
ICE0805R	Remote*	872 (396)	737 (335)	21.2	-	5.4	230/50/1	14.6	16	14,729
ICE0805W	Water	881 (400)	792 (360)	22.3	119	4.4	230/50/1	9.2	16	14,354

**Requires Remote VRC 2061 Condenser and precharged line set*

NOTES:
Number of Wires: 3 (including ground)
Approx. Shipping Weight lbs (kg): ICE0806A 220 (100) • ICE0806R 220 (100) • ICE0806W 210 (96)) • ICE0805A 220 (100) • ICE0805R 220 (100) • ICE0805W 210 (96)
Refrigerant Type: R404A

★ ENERGY STAR qualified machine.
Please see our website www.iceomatic.com for the latest list of ENERGY STAR qualified machines and available rebates

11100 E. 45th Avenue
Denver, CO 80239

Phone: **1. 866. PURE. ICE**
Fax: **303. 371. 6296**
www.iceomatic.com

Rev: **A-02/09**
Part: **1010**