Scotsman

PRODIGY smart thinking

# N0622 – 600 lb Nugget Ice Machine

## Prodigy® Nugget Ice Machine

**PRELIMINARY**

Shown on ID150 dispenser.

## Features

Scotsman Nugget Ice™ was created with the consumer in mind. It's soft, chewable form make it a favorite for all types of beverages. The ice displaces more liquid than cubed ice, lowering syrup costs per cup.

Prodigy Nugget Ice Machines are highly efficient, using up to 50% less water and 15 % less energy than cube ice machines.

AutoAlert™ indicator lights constantly communicate about operating status and actually signal your staff when it's time to descale, sanitize and more - making upkeep practically foolproof.

Preventative maintenance is simplier than ever with easily-removed panels allowing clear access to internal components and a diagnostic code display insuring the right fix the first time. Reusable air filter is easily removable from the outside.

An optional advanced feature Smart-Board™ provides NAFEM data protocol and additional operational data that can be displayed on-screen or transmitted remotely, resulting in early alert and fast diagnosis of operating issues.

An optional Vari-Smart™ ultrasonic ice level control sensor allows you the flexibility to program ice levels, for up to 7 days, keeping just the right amount of freshly made ice in the bin.

Industry leading 3 year parts and labor warranty.

## 24 Hour Volume Production

| Air Cooled | | | Remote Cooled | | | Water Cooled | | |
|---|---|---|---|---|---|---|---|---|
| 70˚F/21˚C 50˚F/10˚C lb/kg | Air | Water 90˚F/32˚C 70˚F/21˚C lb/kg | 70˚F/21˚C 50˚F/10˚C lb/kg | Air | Water 90˚F/32˚C 70˚F/21˚C lb/kg | 70˚F/21˚C 50˚F/10˚C lb/kg | Air | Water 90˚F/32˚C 70˚F/21˚C lb/kg |
| 643/292 | | 500/227 | 660/299 | | 530/240 | 715/325 | | 570/259 |

c UL us

NSF

NAFEM DATA PROTOCOL COMPLIANT

CERTIFIED ISO 9001:2000

agion Nature's antimicrobial

## Modular Bin & Dispenser Options

| Model Number | Dimensions W" x D" x H" | AHRI Certified Bin Capacity lb/kg | Application Capacity lb/kg | Finish | Ship Weight lb/kg |
|---|---|---|---|---|---|
| B322S | 22 x 34 x 44** | 370/168 | 290/132 | SS | 140/64 |
| B530P* | 30 x 34 x 44** | 536/244 | 420/191 | Poly | 150/68 |
| B530S* | 30 x 34 x 44** | 536/244 | 420/191 | SS | 110/50 |
| ID150* | 22 x 30 x 35.625 | | 150/68 | SS | 150/68 |
| ID200* | 30 x 30 x 35.625 | | 200/91 | SS | 195/89 |
| ID250* | 30 x 30 x 39.625 | | 250/114 | SS | 200/91 |

*Contact Scotsman for bin top requirements. **Add 6" H for bin legs

Bin: B530S

Dispenser: ID200

## Nugget Ice

The Original Chewable Ice™! Soft ice ideal for fountain beverages and blended drinks.

## Warranty

- 3 years parts and labor on all components.
- 5 years parts on the compressor.

Warranty valid in North, South & Central America. Contact factory for warranty in other regions.


**Scotsman Ice Systems**
**775 Corporate Woods Parkway**
**Vernon Hills, IL 60061**

**1-800-SCOTSMAN**
**Fax: 847-913-9844**
**E-mail: customer.service@scotsman-ice.com**

**www.scotsman-ice.com**


N0622 – 600 lb Nugget Ice Machine

# Scotsman®

*The smart choice in ice.™*

# N0622 – 600 lb Nugget Ice Machine

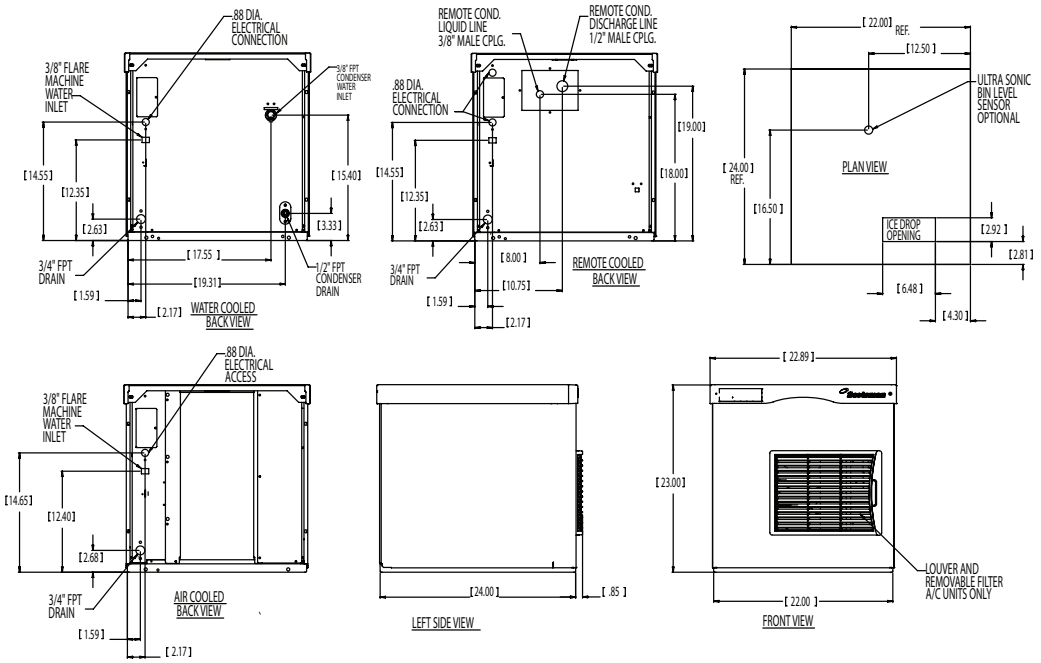


## Specifications

| Model Number | Condenser Unit | Basic Electrical Volts/Hz/Phase | Max. Fuse Size or HACR Circuit Breaker (amps) | Circuit Wires | Min. Circuit Ampacity | Energy Consumption kWh/100 lb (45.4 kg) 90˚F(32˚C)/70˚F(21˚C) | Water Usage Gallons/100 lb (liters/45.4 kg) Potable 90˚F(32˚C)/ 70˚F(21˚C) | Water Usage Gallons/100 lb (liters/45.4 kg) Condenser 90˚F(32˚C)/ 70˚F(21˚C) |
|---|---|---|---|---|---|---|---|---|
| N0622A-1A | Air | 115/60/1 | 25 | 2 | 18.3 | 5.3 | 12.0/45.5 | - |
| N0622R-1A | Remote | 115/60/1 | 25 | 2 | 19.4 | 5.6 | 12.0/45.5 | - |
| N0622W-1A | Water | 115/60/1 | 25 | 2 | 16.7 | 4.4 | 12.0/45.5 | 102/386.7 |
| N0622A-32A | Air | 208-230/60/1 | 15 | 2 | 9.8 | 5.3 | 12.0/45.5 | - |
| N0622W-32A | Water | 208-230/60/1 | 15 | 2 | 8.9 | 4.4 | 12.0/45.5 | 102/386.7 |

## All Models

Dimensions (W x D x H):

Unit:
22" x 24" x 23"
(55.9 x 61.0 x 58.4 cm)

Shipping Carton:
25.5" x 27.5" x 28.5"
(64.8 x 69.9 x 72.4 cm)

Shipping Weight:
172 lb/78 kg

BTUs per hour:
6,100

Refrigerant:
R-404A

## Accessories

| Model Number | Description |
|---|---|
| KVS | Vari-Smart™ Ice Level Control - Program ice bin levels to match ice needs. |
| KSBU | Smart-Board™ Advanced Control - Use additional operational data for fast diagnosis. |
| KSBU-N | Smart-Board™ Advanced Control with Network - Network capable. |
| KPFSA223 | Side Air Flow Kit for 23" Tall Prodigy Flaker and Nugget |
| ERC111-1A | Remote Condenser for N0622R, 115V/60/1 |
| RTE10 | Line set, Precharged, R-404A, 10 ft. |
| RTE25 | Line set, Precharged, R-404A, 25 ft. |
| RTE40 | Line set, Precharged, R-404A, 40 ft. |
| RTE75 | Line set, Precharged, R- 404A-75 ft |

* Scotsman recommends all ice machines have water filtration. See Scotsman Sanitation Matrix for details.

## Operating Requirements

| | Minimum | Maximum |
|---|---|---|
| **Air Temperatures** | 50°F (10°C) | 100°F (38°C) |
| **Water Temperatures** | 40°F (4.4°C) | 100°F (38°C) |
| **Remote Cond. Temps** | -20°F (-29°C) | 120°F (49°C) |
| **Water Pressures** | 20 PSIG (1.4 bar) | 120 PSIG (8.3 bar) |
| **Electrical Voltage** | -5% | +10% |

Specifications and design are subject to change without notice.


**Scotsman Ice Systems**
**775 Corporate Woods Parkway**
**Vernon Hills, IL 60061**

**1-800-SCOTSMAN**
**Fax: 847-913-9844**
**E-mail: customer.service@scotsman-ice.com**

**www.scotsman-ice.com**


© 2009 Scotsman Ice Systems.

SIS-SS-PRD-N0622
8-09