Scotsman

PRODIGY smart thinking

N1322 – 1300 lb Nugget Ice Machine

Prodigy® Nugget Ice Machine

PRELIMINARY

Shown on B948S bin with optional KLP8S legs.

Features

Scotsman Nugget Ice™ was created with the consumer in mind. It's soft, chewable form make it a favorite for all types of beverages. The ice displaces more liquid than cubed ice, lowering syrup costs per cup.

Prodigy Nugget Ice Machines are highly efficient, using up to 50% less water and 15 % less energy than cube ice machines.

AutoAlert™ indicator lights constantly communicate about operating status and actually signal your staff when it's time to descale, sanitize and more - making upkeep practically foolproof.

Preventative maintenance is simplier than ever with easily-removed panels allowing clear access to internal components and a diagnostic code display insuring the right fix the first time. Reusable air filter is easily removable from the outside.

Maximize capacity by placing 2 units next to each other side by side on a 48" bin, bringing ice production levels up to 2,700 lbs. per 24 hours.

An optional advanced feature Smart-Board™ provides NAFEM data protocol and additional operational data that can be displayed on-screen or transmitted remotely, resulting in early alert and fast diagnosis of operating issues.

An optional Vari-Smart™ ultrasonic ice level control sensor allows you the flexibility to program ice levels, for up to 7 days, keeping just the right amount of freshly made ice in the bin.

Industry leading 3 year parts and labor warranty.

24 Hour Volume Production

Air Cooled			Remote Cooled			Water Cooled		
70°F/21°C 50°F/10°C lb/kg	Air Water	90°F/32°C 70°F/21°C lb/kg	70°F/21°C 50°F/10°C lb/kg	Air Water	90°F/32°C 70°F/21°C lb/kg	70°F/21°C 50°F/10°C lb/kg	Air Water	90°F/32°C 70°F/21°C lb/kg
1180/535		950/431	1329/602		1030/467	1354/614		1050/476

c UL us

NSF

NAFEM DATA PROTOCOL COMPLIANT

CERTIFIED ISO 9001:2000

agion Nature's antimicrobial

Modular Bin & Dispenser Options

Model Number	Dimensions W" x D" x H"	AHRI Certified Bin Capacity lb/kg	Application Capacity lb/kg	Finish	Ship Weight lb/kg
B948S*	48 x 34 x 44**	700/319	893/406	SS	220/100
BH1100BB	48 x 34 x 50**	860/390	1100/499	SS w/GBB***	280/127
BH1100SS	48 x 34 x 50**	860/390	1100/499	SS	280/127
BH1300BB	60 x 34 x 50**	1100/499	1400/635	SS w/GBB**	310/140
BH1300SS	60 x 34 x 50**	1100/499	1400/635	SS	310/140
BH1600BB	60 x 34 x 62**	1755/796	1375/624	SS w/GBB***	370/168
BH1600SS	60 x 34 x 62**	1755/796	1375/624	SS	370/168

*Contact Scotsman for bin top requirements. **Add 6" H for bin legs. ***Stainless Steel with Galvanized Back & Bottom

N0922 shown side by side on B948S bin

Nugget Ice

The Original Chewable Ice™! Soft ice ideal for fountain beverages and blended drinks.

Warranty

- 3 years parts and labor on all components.
- 5 years parts on the compressor.

Warranty valid in North, South & Central America. Contact factory for warranty in other regions.

Scotsman Ice Systems
775 Corporate Woods Parkway
Vernon Hills, IL 60061

1-800-SCOTSMAN
Fax: 847-913-9844
E-mail: customer.service@scotsman-ice.com

www.scotsman-ice.com

N1322 – 1300 lb Nugget Ice Machine

Scotsman®

The smart choice in ice.™

N1322 – 1300 lb Nugget Ice Machine

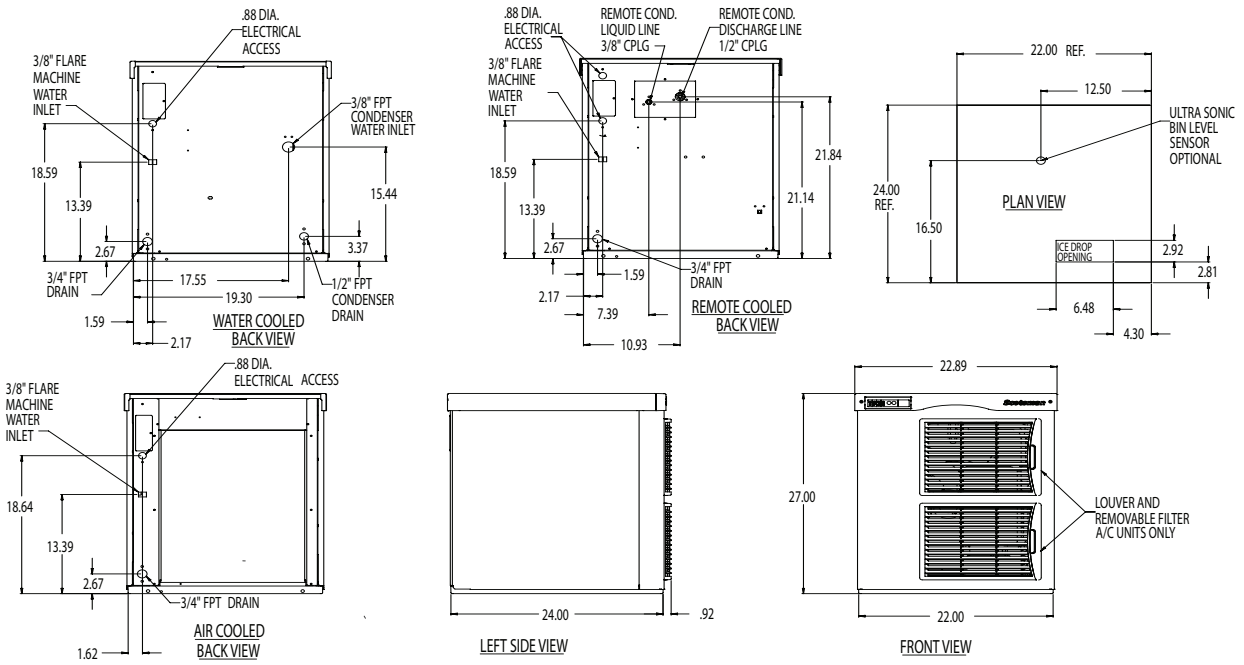

Specifications

Model Number	Condenser Unit	Basic Electrical Volts/Hz/Phase	Max. Fuse Size or HACR Circuit Breaker (amps)	Circuit Wires	Min. Circuit Ampacity	Energy Consumption kWh/100 lb (45.4 kg) 90˚F(32˚C)/70˚F(21˚C)	Water Usage Gallons/100 lb (liters/45.4 kg) Potable 90˚F(32˚C)/ 70˚F(21˚C)	Water Usage Gallons/100 lb (liters/45.4 kg) Condenser 90˚F(32˚C)/ 70˚F(21˚C)
N1322A-32A	Air	208-230/60/1	30	2	19.1	4.2	12.0/45.5	-
N1322R-32A	Remote	208-230/60/1	30	2	18.9	4.0	12.0/45.5	-
N1322W-32A	Water	208-230/60/1	30	2	17.9	4.0	12.0/45.5	81/307.1

All Models

Dimensions (W x D x H):

Unit: **Individual**
22″ x 24″ x 27″
(55.9 x 61.0 x 68.6 cm)

Side by Side
44″ x 24″ x 27″
(111.8 x 61.0 x 68.6 cm)

Shipping Carton:
25.5″ x 27.5″ x 32.5″
(64.8 x 69.9 x 82.6 cm)

Shipping Weight:
225 lb/102 kg

BTUs per hour:
15,400

Refrigerant:
R-404A

Accessories

Model Number	Description
KVS	Vari-Smart™ Ice Level Control - Program ice bin levels to match ice needs.
KSBU	Smart-Board™ Advanced Control - Use additional operational data for fast diagnosis.
KSBU-N	Smart-Board™ Advanced Control with Network - Network capable.
KPFSA227	Side Air Flow Kit for 27″ Tall Prodigy Flaker and Nugget
ERC311-1A	Remote Condenser for N1322R, 115V/60/1
RTE10	Line set, Precharged, R-404A, 10 ft.
RTE25	Line set, Precharged, R-404A, 25 ft.
RTE40	Line set, Precharged, R-404A, 40 ft.
RTE75	Line set, Precharged, R- 404A-75 ft

* Scotsman recommends all ice machines have water filtration. See Scotsman Sanitation Matrix for details.

Operating Requirements

	Minimum	Maximum
Air Temperatures	50°F (10°C)	100°F (38°C)
Water Temperatures	40°F (4.4°C)	100°F (38°C)
Remote Cond. Temps	-20°F (-29°C)	120°F (49°C)
Water Pressures	20 PSIG (1.4 bar)	120 PSIG (8.3 bar)
Electrical Voltage	-5%	+10%

Specifications and design are subject to change without notice.

Scotsman Ice Systems
775 Corporate Woods Parkway
Vernon Hills, IL 60061

1-800-SCOTSMAN
Fax: 847-913-9844
E-mail: customer.service@scotsman-ice.com

www.scotsman-ice.com

© 2009 Scotsman Ice Systems.

SIS-SS-PRD-N1322
8-09