Job Name _____

Item # _____

FOOD SERVICE EQUIPMENT

Spec Sheet No. TR-10

Sealed Well

- **SW-2E-120**
- **SW-3E-120**
- **SW-4E-120**
- **SW-2E-208**
- **SW-3E-208**
- **SW-4E-208**
- **SW-5E-208**
- **SW-2E-240**
- **SW-3E-240**
- **SW-4E-240**
- **SW-5E-240**

SW-5E-208 / 240 Shown

Upgrade Options:

- Thermostatic Controls-Add suffix **-T**
- Manifold drains - Add suffix **-M**
- Thermostatic controls & Manifold drains - Add suffix**-MT**
- Portable - *Add Prefix **P** to model #*

Accessories:

- Stationary Tubular Tray Rail - *Models **TTR-(2-5)***
- Drop-Down Tubular Tray Rail - *Models **TTR-(2-5)D***
- Solid Tray Shelf - *Models **TTS-(2-5)***
- 12" Wide Double Tier Overshelf-***TOS-(2-5)***
- 18" Wide Double Tier Overshelf-***TOS-(2-5)-18***
- 12" Wide Single Tier Overshelf-***STOS-(2-5)***
- 18" Wide Single Tier Overshelf-***STOS-(2-5)-18***
- Buffet Shelf - *Models **TBS-(2-5)***
- Serving Shelf - *Models **TSS-(2-5)***
- Dish Shelf Add-On(mount under tray shelf)- *Models **TDS-(2-5)***

Specifications

TOP: *20 gauge #302 stainless steel with die stamped pan openings. (11.875" x 20.062")*

BODY: *22 gauge #430 stainless steel.*

LEGS: *18 gauge stainless steel with fully adjustable non-marking tip.*

UNDERSHELF: *22 gauge #430 stainless steel.*

LINING: *20 Gauge stainless steel deep drawn with drain.*

CUTTING BOARD: *8" wide and 1" thick white thermoplastic.*

CUTTING BOARD BRACKETS: *16 gauge #302 stainless steel.*

Features

Drains with gate valves per well

6' electrical cord with plug

Infinite control knobs

Indicator lights

Single phase wiring

640 Watt elements (120 volt)

825 Watt elements (208 volt)

1100 Watt elements (240 volt)

Fiberglass insulation between each compartment

Freight Class 85

Supreme Metal

3125 Trotters Parkway
Alpharetta, GA 30004
www.supremetal.com

Toll Free: 800-645-2526
770-740-6000
Fax: 770-740-6010

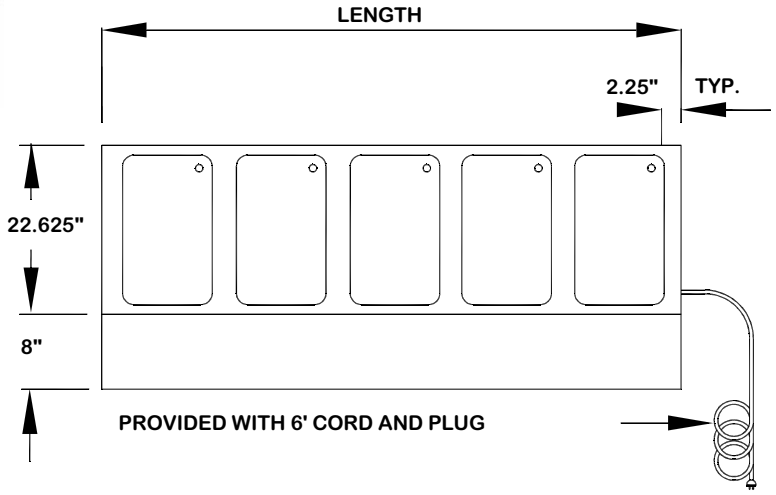

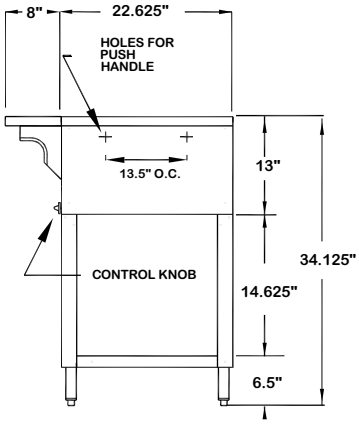

SECTIONAL VIEW

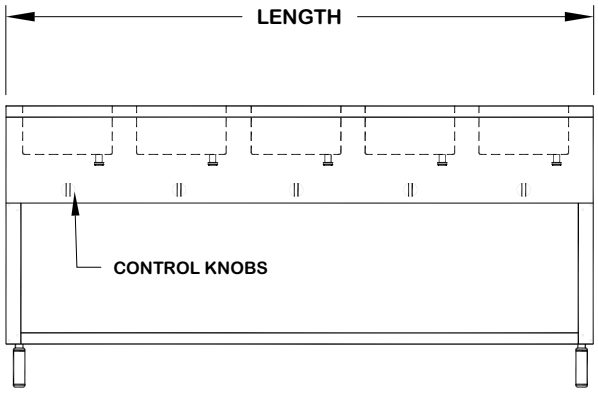

ELEVATION VIEW

Model #	Length	# of Wells	Weight	Cubic Feet	NEMA Plug	True Amp Draw / Watts per Unit
SW-2E-120	A = 31-13/16"	2	92	28.1	5-20P	10.67 / 1280
SW-3E-120	B = 47 1/8"	3	120	41.32	5-20P	16 / 1920
SW-4E-120	C = 62 7/16"	4	152	54.55	L5-30P	21.33 / 2560
SW-2E-208	A = 31-13/16"	2	92	28.1	6-20P	7.93 / 1650
SW-3E-208	B = 47 1/8"	3	120	41.32	6-20P	11.9 / 2475
SW-4E-208	C = 62 7/16"	4	152	54.55	L6-30P	15.87 / 3300
SW-5E-208	D = 77 3/4"	5	170	66.94	L6-30P	19.84 / 4125
SW-2E-240	A = 31-13/16"	2	92	28.1	6-20P	9.17 / 2200
SW-3E-240	B = 47 1/8"	3	120	41.32	6-20P	13.75 / 3300
SW-4E-240	C = 62 7/16"	4	152	54.55	L6-30P	18.33 / 4400
SW-5E-240	D = 77 3/4"	5	170	66.94	L6-30P	22.92 / 5500

NEMA PLUG 5-20P

NEMA PLUG 6-20P

NEMA PLUG L5-30P

NEMA PLUG L6-30P

We reserve the right to modify specifications in line with our policy of continuous product improvement.

© Supreme Metal 2006.