RF0388 • RF0399
Flake Ice Machines

Model RF0388A
Flake Ice Machine

Model RF0399A
Flake Ice Machine

- Up to 332 lbs. (151 kgs.) daily flake ice production.
- Up to 120 lbs. (54 kgs.) ice storage capacity.
- High load capacity bearings for enhanced reliability.
- Heavy duty stainless steel cabinet resists corrosion.
- Easy access door, slides up & out of the way.

Warranty

- 3-year Parts
- 2-year Labor
- Compressor parts for 5 years and labor for 2 years.

ISO 9001:2000 Quality System Certified

America's #1 Selling Ice Machine

Ice Cube & Flake Machines • Ice Storage Bins • Ice Dispensers

Manitowoc RF0388 • RF0399 Flake Ice Machines

	Model	Ice Shape	Ice Production 24 Hrs. 70° Air / 50°F Water	Ice Production 24 Hrs. 90° Air / 70°F Water	Power kWh/ 100 lbs. 90°/70°F	Potable Water Usage (100 lbs./ 45.4 kgs. of Ice)	Bin Storage Capacity
AIR-COOLED	RF0388A	Flake	332 lbs.	270 lbs.	6.41	12 Gal.	90 lbs.
			151 kgs.	122 kgs.		45.4 L	41 kgs.
	RF0399A	Flake	332 lbs.	270 lbs.	6.41	12 Gal.	120 lbs.
			151 kgs.	122 kgs.		45.4 L	54 kgs.

"A" following model number indicates "Air" condensing unit.
Test conditions are 90°F/32°C air, 70°F/21°C water, and 30 ± 3 psig water inlet pressure.

Space-Saving Designs

	RF0388	RF0399
Height	42.22" 107.24 cm	46.16" 117.24 cm
Width	29.06" 73.81 cm	29.06" 73.81 cm
Depth	27.17" 69.00 cm	27.17" 69.00 cm
Bin Storage	90 lbs. 41 kgs.	120 lbs. 54 kgs.

Height includes adjustable bin legs 4.50" to 6.00", 11.43 cm to 15.24 cm) set at 6.00" (15.24 cm).

Ice Machine Electric

*115/60/1. (230/50/1 also available.)

115/60/1 ice machines are factory pre-wired with a 6' (180 cm) power cord and NEMA 5-15P plug configuration.

*230/50/1 ice machines are factory pre-wired with a 6' (180 cm) power cord with either: no plug or prewired with Schuko or Blade "G Type" Plugs.

Total ampacity: Air-cooled: 10 amps.

Maximum fuse size: Air-cooled: 15 amps.

HACR-type circuit breakers can be used in place of fuses.

Ice Shape

Flake ice is small hard bits of ice ideally suited for presentation applications.

Ice shown actual size.

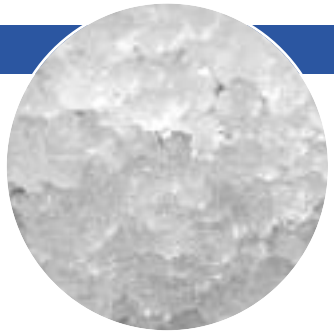

Specifications

BTU Per Hour:
3,500 (average)

Compressor:
Nominal rating: 1/2 HP

Refrigerant: R-404A

Operating Limits:
- Ambient Temperature Range: 50˚-110˚F (10˚-43˚C)
- Water Temperature Range: 37˚-90˚F (3˚-32˚C)
- Water Pressure Ice Maker Water In: Min. 14 psi (96.5 kPA) Max. 80 psi (551.6 kPA)

Standard Equipment

RF0388 / RF0399

Ice Scoop, 6" Bin Legs, Alternate Low Profile Legs Standard Legs Adjustable from 4-1/2" to 6" Low Profile Non-Adjustable 1/4"

Air Flow Overhead View

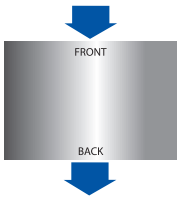

Air in front, air out back, no side vents.

RF0388 / RF0399

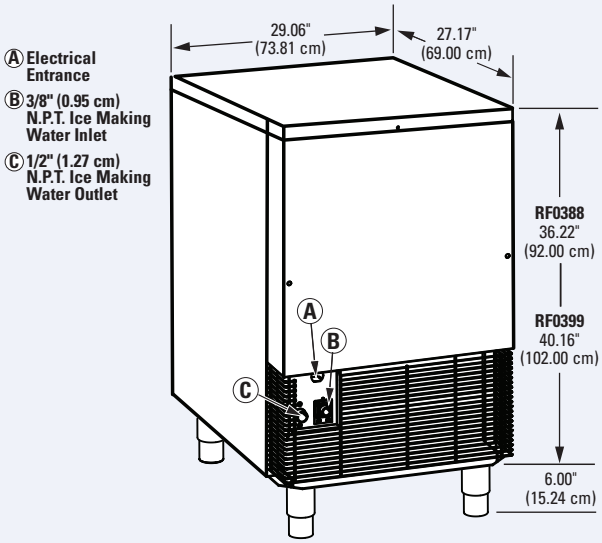

Installation Note - Minimum installation clearance: Top/sides: 8" (20.32 cm), back: 5" (12.70 cm).

4540 ©2009 Manitowoc 7/09 Continuing product improvement may necessitate change of specifications without notice.

Mixed Sources
Product group from well-managed forests, controlled sources and recycled wood or fiber
www.fsc.org Cert no. SW-COC-001886
© 1996 Forest Stewardship Council
FSC

We are committed to protecting the environment and its resources. For up-to-date product data always view an electronic version on our web site.

Manitowoc

MANITOWOC ICE
2110 South 26th Street, P.O. Box 1720
Manitowoc, WI 54221-1720, USA
Ph: 920-682-0161 • Fax: 920-683-7589
Visit us online at www.manitowocice.com

manitowoc