RF1200
Flake Ice Machine

Model RF1200A
Flake Ice Machine
on B-570 Bin

- Up to 1,186 lbs. (538 kgs.) daily flake ice production.
- High load capacity bearings for enhanced reliability.
- Heavy duty stainless steel cabinet resists corrosion.

Warranty

- 3-year Parts
- 2-year Labor
- Compressor parts for 5 years and labor for 2 years.

ISO 9001: 2000 Quality System Certified

America's #1 Selling Ice Machine

Ice Cube & Flake Machines • Ice Storage Bins • Ice Dispensers

Manitowoc RF1200 Flake Ice Machine

	Model	Ice Shape	Ice Production 24 Hrs. 70° Air / 50°F Water	Ice Production 24 Hrs. 90° Air / 70°F Water	Power kWh/ 100 lbs. 90°/70°F	Water Usage (100 lbs./45.4 kgs. of Ice) Potable Water	Water Usage (100 lbs./45.4 kgs. of Ice) Condenser Water
AIR-COOLED	RF1200A	Flake	1,186 lbs.	864 lbs.	5.63	12 Gal.	N/A
			538 kgs.	392 kgs.		45.4 L	N/A
WATER-COOLED	RF1200W	Flake	1,204 lbs.	1,004 lbs.	4.11	12 Gal.	103 Gal.
			546 kgs.	455 kgs.		45.4 L	390 L

Ice Machine Electric

208-230/60/1 standard. (230/50/1 also available.)

Minimum circuit ampacity: 15 amps.

Maximum fuse size: 15 amps.

HACR-type circuit breakers can be used in place of fuses.

Specifications

BTU Per Hour:
Air: 14,000 (average)
Water: 1,500 (average)

Compressor:
Nominal rating: 1.5 HP

Refrigerant: R-404A

Operating Limits:

- Ambient Temperature Range Air- and Water-cooled: 50˚-110˚F (10˚-43˚C)
- Water Temperature Range: 37˚-90˚F (3˚-32˚C)
- Water Pressure Ice Maker Water In: Min. 14 psi (96.5 kPA) Max. 80 psi (551.6 kPA)
- Condenser Inlet Water In: (Water-cooled only) Min 20 psi (137.9 kPA) Max 150 psi (1034.2 kPA) Water Condenser not for sea water applications.

Standard Equipment

K-00404 30" B-Style Bin Adapter

Accessories

K-00405 48" B Style Bin Adapter*

*adapter not for use with Large Capacity Bins.

Air Flow Overhead View

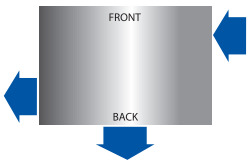

Air in side, air out back and side.

Space-Saving Designs

	RF1200 B-570
Height	77.56" 197.00 cm
Width	30.00" 76.20 cm
Depth	34.00" 86.36 cm
Bin Storage	430 lbs. 195 kgs.

Height includes adjustable bin legs 6.00" to 7.00", (15.24 to 17.78 cm) set at 6.00" (15.24 cm).

Ice Shape

Combination of small and large bits of ice for presentation and cooling applications.

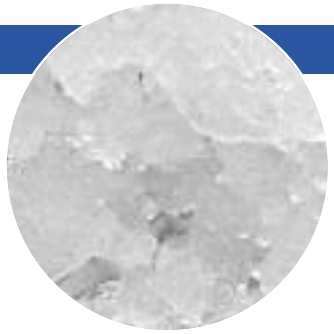

Ice shown actual size

RF1200 on B-570 Storage Bin

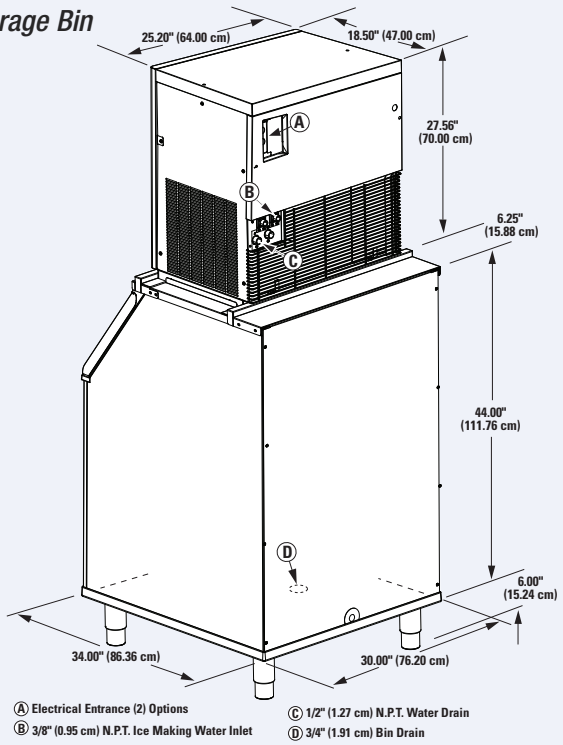

Installation Note - Minimum installation clearance: Top/sides: 8" (20.32 cm), back: 5" (12.70 cm).

4543

©2009 Manitowoc. 7/09 Continuing product improvement may necessitate change of specifications without notice.

Mixed Sources
Product group from well-managed forests, controlled sources and recycled wood or fiber
www.fsc.org Cert no. SW-COC-001886
© 1996 Forest Stewardship Council
FSC

We are committed to protecting the environment and its resources. For up-to-date product data always view an electronic version on our web site.

Manitowoc

MANITOWOC ICE
2110 South 26th Street, P.O. Box 1720
Manitowoc, WI 54221-1720, USA
Ph: 920-682-0161 • Fax: 920-683-7589
Visit us online at www.manitowocice.com

manitowoc