CONVECTION OVEN

MARATHONER GOLD
GAS, DOUBLE DECK

Job _____ Item# _____

GS/25SC, GS/25CCH, GB/25SC, GB/25CCH

Standard Features

- ENERGY STAR® qualified (standard depth only)
- Patented, high efficiency, non-clog Jet Stream burners
- 90,000 BTU (NAT or LP) per oven cavity
- Available standard and bakery depths
- Double deck convection oven is 66-1/2" in height
- Patented "plug-in, plug-out" control panel - easy to service
- Stainless Steel front, sides and top
- Stainless steel rear jacket
- Dependent doors with windows
- Coved, fastener-free, porcelain interior
- Heavy duty, cool touch, stainless steel door handle
- Soft Air, two speed, 1/2 hp, fan motor
- 11-position rack guides and 5 plated oven racks
- Electronic ignition with solid state temperature controls
- Forced cool down fan mode
- Oven "ready" light -cycles with burners
- Interior oven lights

Available Controls

SC-Standard Controls
140°F to 500°F solid state thermostat and 60 minute mechanical cook timer.

CCH-Cycle / Cook & Hold Control
150°F to 500°F temperature controller with 140°F to 200°F "Hold" thermostat Dual digital display shows time and temperature. A fan cycle timer pulses the fan.

(GS/25SC shown with optional casters)

STANDARD CONSTRUCTION SPECIFICATIONS

Exterior Finish: Stainless steel front, sides, top and rear jacket.

Doors: Dependent doors with windows. Stainless steel construction, heavy-duty welded steel frame and 5/8" diameter full-length hinge pin.

Oven Interior: Porcelain enamel finish, coved, fastener free.

Rack and Rack Guides: Heavy-duty removable wire rack guides spaced on 1-5/8" centers offer 11 different rack positions. 5 wire racks provided with each oven.

Blower Fan and Motor: 1/2hp, 2-speed motor, 1725/1140 r.p.m

Legs: 6" stainless steel legs standard.

Oven Heating: 90,000 BTU (NAT or LP). Oven heating is regulated by an adjustable solid state thermostat control. Jet Stream style burners direct flame towards rear of combustion chamber. Combustion products are drawn into oven interior and recirculated prior to venting.

Electronic Ignition: Hot surface ignitor with flame safety device.

Control Panel: Located of front, at right side of oven, away from heat zone. Removable panel opens downward for easy servicing.

Interior Lights: Two 40 watt high temperature recessed lamps located within the oven cavity.

Note: Oven cannot be operated without fan in operation.

Models: ☐GS/25SC ☐GB/25SC ☐GS/25CCH ☐GB/25CCH

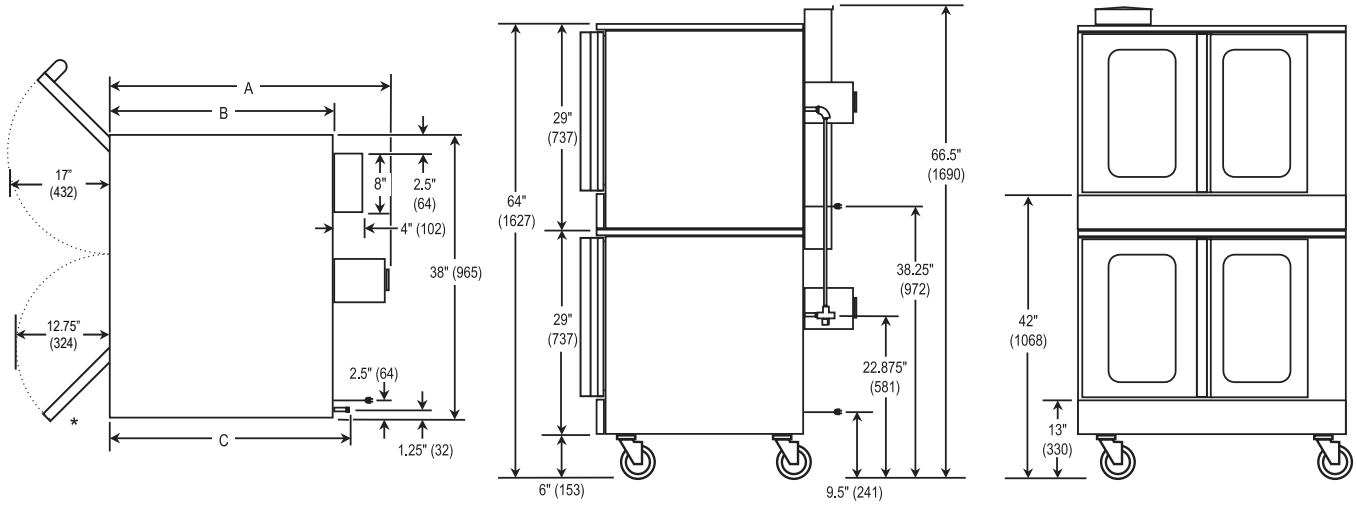

MODEL	Depth			Oven Interior			Rack Clearance		Shipping Crate				
	A	B	C	Width	Depth	Height	Width	Depth	Width	Depth	Height	Volume	Weight
GS/25	39.75" (1010)	30" (763)	34.38" (873)	29" (737)	22.5" (572)	20" (508)	28.25" (718)	22" (559)	48" (1220)	57" (1448)	69" (1753)	118 cu. ft. (3.34 cu. m.)	1040 lbs (471.7 kg.)
GB/25	46.75" (1187)	36.38" (924)	40.75" (1035)	29" (737)	28" (711)	20" (508)	28.25" (718)	27.25" (692)	48" (1220)	57" (1448)	69" (1753)	118 cu. ft. (3.34 cu. m.)	1180 lbs (523.2 kg.)

Note: With stacking option, crated height is 69" (1753 mm)

UTILITY INFORMATION

GAS:
- Standard and Bakery Depth: 90,000 BTU (NAT or LP) per oven cavity
- One 3/4" male connection
- Required minimum inlet pressure:
  - Natural gas 7" W.C.
  - Propane gas 11" W.C.

ELECTRIC: Standard: 120/60/1 phase, furnished with 6' cord w/3- prong plug (1 plug/deck). NEMA #5-15p. Total maximum amps 7.9. Optional: 208/60/1 or 3* phase (190-219 volts). Supply must be wired to junction box with terminal block located at rear. Total maximum amps 4.3 per deck. Optional: 240/60/1 or 3* phase (220-240 volts). Supply must be wired to junction box with terminal block located at rear. Total maximum amps 3.8 per deck. Optional: 240/50/1 or 3* phase (208-240 volts). Supply must be wired to junction box with terminal block located at rear. Total maximum amps 6.0 per deck

* All units are shipped single phase. Single phase units can be easily converted to three phase

MISCELLANEOUS

- If using flex hose connector, the I.D should not be smaller than 3/4" and must comply with ANSI Z 21.69.
- If casters are used with flex hose, a restraining device should be used to eliminate undue strain on the flex hose.
- Clearances from combustibles: Top-0", bottom-0", right side-0" and left-3"
- Recommend - install under vented hood
- Check local codes for fire and sanitary regulations
- If the unit is connected directly to the outside flue, an A.G.A approved down draft diverter must be installed at the flue outlet of the oven
- Oven cannot be operated without fan in operation

Notice: Southbend reserves the right to change specifications and product design without notice. Such revisions do not entitle the buyer to corresponding changes, improvements, additions, or replacements for previously purchased equipment.

OPTIONS AND ACCESSORIES

- ❑ Stainless Steel oven interior
- ❑ Stainless Steel exterior bottom
- ❑ 208/240V 50/60 cycle (for use on 1 or 3 phase)
- ❑ Bolt-down flanged legs
- ❑ Swivel Caster - front with locks
- ❑ Knocked down packaging
- ❑ Export Crating
- ❑ Extra oven racks
- ❑ Down draft diverter for direct flue
- ❑ 3/4" quick disconnect with flexible hose (specify length: 3ft, 4ft, or 5ft)
- ❑ 2" air insulation panel (stainless steel only)

INTENDED FOR COMMERCIAL USE ONLY.
NOT FOR HOUSEHOLD USE.

1100 Old Honeycutt Road, Fuquay-Varina, NC 27526
(919) 762-1000 www.southbendnc.com